Blomberg

# Front-Loading Dryer

Owner's Guide:

Installation and Operation Instructions

DHP24404W2

EN

2960313967_EN/111224.1109

RECYCLED &
RECYCLABLE PAPER

**Dear Customer,**

**Please read this guide prior to use this product!**

Thank you for choosing Blomberg product. We would like you to achieve the optimal efficiency from this high quality product which has been manufactured with state of the art technology. Please make sure you read and understand this guide and supplementary documentation fully before use.

Observe all warnings and information herein. Therefore you can protect both yourself and your product against potential damages.

Keep the manual. Include this guide with the unit if you hand it over to someone else.

## Symbols and Remarks

The following symbols are used in the user guide:

Danger that may cause death or injury

Read the manual

Important information or useful usage tips

Warning against hot surfaces

Warning against electric shock

Warning against UV Radiation hazard

Warning against scalding

The product's packaging is made of recyclable materials, in accordance with the National Environment Legislation.

Warning against fire

**NOTICE** Danger that may cause material damage on the product or surrounding area

**1 Your Dryer 4**

1.1 Overview ..... 4
1.2 Technical Specifications..... 5

**2 Important Safety Instructions 6**

**3 Installation Instructions 11**

3.1 Electrical connection..... 11
3.2 Grounding Instructions ..... 12
3.3 Appropriate installation location ..... 13
3.4 Minimum Installation Clearances..... 13
3.5 Use on top of a washer ..... 13
3.6 Adjusting the feet..... 13
3.7 Destroying packaging material..... 13
3.8 Connecting to the drain ..... 14

**4 Preparation 15**

4.1 Laundry suitable for drying in drying machine ..... 15
4.2 Laundry not suitable for drying in drying machine ..... 15
4.3 Preparing the laundry to be dried..... 15
4.4 What to do for energy saving..... 15
4.5 Correct load capacity ..... 16

**5 Running the product 17**

5.1 Control Panel..... 17
5.2 Symbols ..... 17
5.3. Preparation of drying machine ..... 18
5.4 Program selection and consumption chart.. 19
5.5 Auxiliary functions..... 22
5.6 Warning indicators..... 23
5.7 Starting the program..... 23
5.8 Child Lock ..... 23
5.9 Changing the program after it is started..... 23
5.10 Cancelling the program..... 24
5.11 End of program ..... 24
5.12 Odour feature ..... 24
5.13 General Description of Steam Programs .. 24
5.14 HomeWhiz Function ..... 25
Getting the Homewhiz Application..... 26

**6 Maintenance and cleaning 27**

6.1 Loading Door Inner Surface..... 27
6.2 Cleaning the sensor ..... 29
6.3 Cleaning the condenser..... 29

**7 Troubleshooting 32**

**8 Warranty Statement 34**

# 1 Your Dryer

## 1.1 Overview

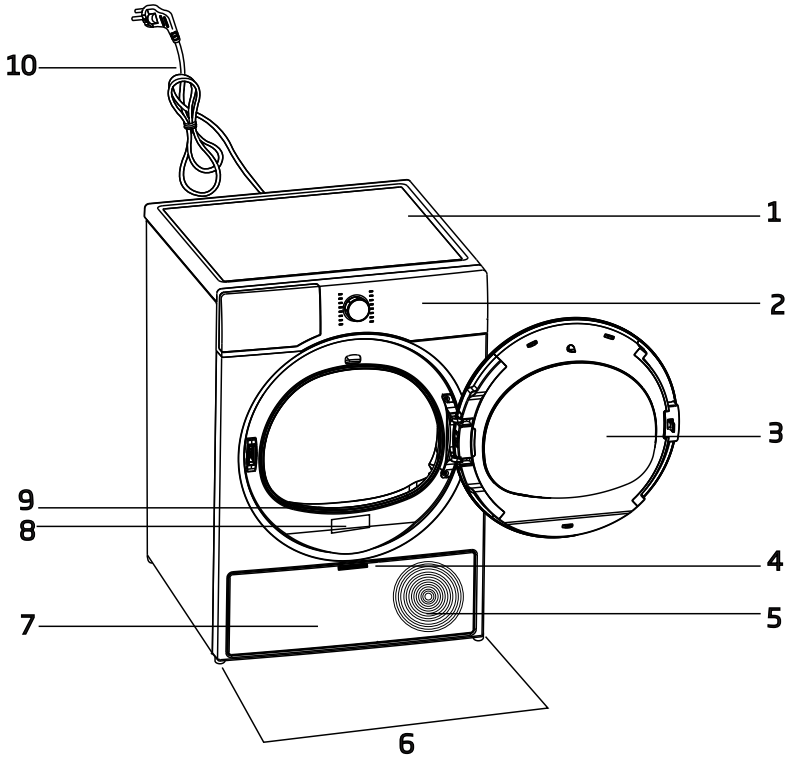


1. Top panel
2. Control panel
3. Loading door
4. Kick plate opening tab
5. Ventilation grids
6. Adjustable feet
7. Kick plate
8. Type label
9. Lint filter
10. Power cable

## 1.2 Technical Specifications

| Model | Heat Pump Dryer with electronic sensor control |
|---|---|
| Height (in) | 33 5/16 |
| Width (in) | 23 3/4 |
| Depth (in) | 27 1/2 |
| Height adjustment of feet (in) | 1/5 |
| Net weight (lbs) | 102 |
| Voltage / Frequency | 208-240V ~ 60 Hz |
| Connected load | 800 W - 4 A |
| Dry Load Capacity | 8kg / 18 lb |
| Capacity | 4,5 cu-ft |

## 2 Important Safety Instructions

**WARNING :** To reduce the risk of fire or electric shock resulting in serious injury or death when using this appliance, follow the basic precautions including the following:

- Read all instructions before using the appliance. Failure to follow these instructions will increase the risk of fire or electric shock and will void the warranty.

**WARNING :**This product has been designed for home use only.

- The appliance must be operated at temperatures between +5°C and +35°C. (41°F and +95°F)
- The appliance must not be installed behind a lockable door, a sliding door or a door with the hinges on the opposite side to that of the tumble dryer.
- Do not install or store this appliance where it will be exposed to weather.
- Do not tamper with the controls.
- Do not repair or replace any part of the appliance or attempt any servicing unless specifically recommended in the user-maintenance instructions or in published user-repair instructions that you understand and have the skills to carry out.
- Never wash the appliance with water.
- Never touch the plug with wet hands.
- Never pull from the cable to unplug the dryer.
- Do not operate the appliance if the power cord or plug is damaged.
- For malfunctions that cannot be solved by information in the operating manual: Turn off and unplug the appliance and call an authorized service provider.

- This appliance must be grounded. In the event of malfunction or breakdown, grounding will reduce the risk of electric shock by providing a path of least resistance for electric current. This appliance is equipped with a cord having an equipment-grounding conductor and a grounded plug. The plug must be plugged into an appropriate outlet that is properly installed and grounded in accordance with all local codes and ordinances.

**WARNING :** Improper connection of the equipment-grounding conductor can result in a risk of electric shock. Check with a qualified electrician or service representative or personnel if you are in doubt as to whether the appliance is properly grounded.

- Power cord plug must be within easy reach after installation.
- To reduce the risk of fire or electric shock, do not use extension cords,  multi-plugs or an adapter to connect the dryer to electrical mains.
- Do not modify the plug provided with the appliance: if it will not fit the outlet, have a proper outlet installed by a qualified electrician.
- If the power supply cord is damaged, it must be replaced by the manufacturer, its service agent or similarly qualified persons in order to avoid an electrical hazard.
- The appliance must not be operated unless it is repaired!
- Ventilation openings in the base must not be obstructed by carpets, etc.
- Exhaust air must not be discharged into a flue used for exhausting fumes from appliances burning gas or other fuels.
- Adequate ventilation must be provided to avoid the back flow of gases into the room from appliances burning other fuels, including open fires.

- Do not dry articles that have been previously cleaned in, washed in, soaked in or spotted with gasoline, dry-cleaning solvents or other flammable or explosive substances as they give off vapors that could ignite or explode.
- Do not use the tumble dryer if industrial chemicals have been used for cleaning what you want to dry.
- Do not dry unwashed items in the tumble dryer.
- Items such as foam rubber (latex foam), shower caps, waterproof textiles, rubber-backed articles and clothes or pillows fitted with foam rubber pads should not be dried in the tumble dryer.
- Do not use fabric softeners or products to eliminate static unless recommended by the manufacturer of the fabric softener or product.
- Blomberg does not recommend the use of fabric softening dryer sheets in our  Electric Dryers. The contents of these sheets can clog the units filters, causing reduced air flow and possible damage to the heating system. You may use fabric softeners in the washing machine but not the dryer
- The appliance may only be used for the drying of textiles that are marked accordingly.
- Undergarments that contain metal reinforcements should not be placed in a tumble dryer. Damage to the tumble dryer can result if any of the metal reinforcement come loose during drying.
- Before loading check all garments for lighters, coins, metal pieces, needles, etc.
- The use of fabric softener sheets is not recommended.
- Do not place items exposed to cooking oils in your dryer. Items contaminated with cooking oils may contribute to a chemical reaction that could cause a load to catch fire. To reduce the risk of fire due to contaminated loads, the final part of a tumble dryer cycle occurs without heat (cool down period). Avoid stopping a tumble dryer before the end of the drying cycle unless all items are quickly removed and spread out so that the heat is dissipated.

**WARNING :** Never stop the tumble dryer before the end of the drying cycle unless all items are quickly removed and spread out to dissipate heat.

- Do not reach into the appliance if the drum is moving.
- Do not allow children to play on or in the appliance.Close supervision of children is necessary when the appliance is used near children.
- Keep pets away from the appliance during the drying cycle.
- Before the appliance is removed from service or discarded, remove the door to the drying compartment.
- Close the loading door when you leave the area where the dryer is located.
- This appliance is not intended for use by persons (including children) with reduced physical, sensory or mental capabilities, or lack of experience and knowledge, unless they are supervised or have been given instructions concerning the use of the appliance by a person responsible for their safety.
- Clean lint filter before or after each load.
- Keep area around the exhaust vent and adjacent surrounding areas free from the accumulation of lint, dust, and dirt.
- The interior of the appliance and exhaust ductwork should be cleaned periodically by qualified service personnel.
- Never use the dryer without the lint filter.
- When your dryer is not in use or after the laundry is taken out following the completion of drying process, turn off by using the On/Off button. In cases when the On/Off button is in the On position while the dryer is plugged in, keep the door of the dryer closed.
- For power saving in models with lamps, when your dryer is not in use, keep the door closed if the On/Off button is in the On position and the dryer is energized.

- Do not use replacement parts that have not been recommended by the manufacturer (e.g. parts made at home using a 3D printer).

| | |
|---|---|
| | Also R290 is a flammable refrigerant. Therefore ensure that the system and pipes are not damaged during operation and transportation.<br>Keep the product from heat sources, otherwise it may catch fire if damaged.<br>Do not dispose of the product by throwing it into fire. |

**WARNING:** In the appliance enclosure, keep ventilation epenings clear of obstruction.
**WARNING:**Do not damage the refrigerant circuit.

**WARNING :** This product can expose you to chemicals including Nickel (Metallic) which is known to the State of California to cause cancer.
For more information go to www.P65Warnings.ca.gov
Note : Nickel is a component in all stainless steel and some other metal components.

## SAVE THESE INSTRUCTIONS

# 3 Installation Instructions

**WARNING!**

**Risk of fire**

The clothes dryer (“appliance‘) installation must be performed by a qualified installer. Install the appliance according to the manufacturer’s instructions and local codes. Do not install a clothes dryer with flexible plastic venting materials. If flexible metal (foil type) duct is installed, it must be of a specific type identified by the ap pliance manufacturer as suitable for use with clothes dryers. Flexible venting materials are known to collapse, be easily crushed, and trap lint. These conditions will obstruct the clothes dryer’s airflow and increase the risk of fire.
To reduce the risk of severe injury or death, follow all installation instructions.

## 3.1 Electrical connection

Connect the appliance to a grounded outlet protected by a fuse or circuit breaker of suitable capacity.

| | |
|---|---|
| 4-wire receptacle (14-30R) | Dryer shipped with cord to fit this type 4 -wire receptacle |
| 3-wire receptacle (10-30R) | If you have 3-wire receptacle, like this, a 3-wire dryer cord must be purchased locally. |

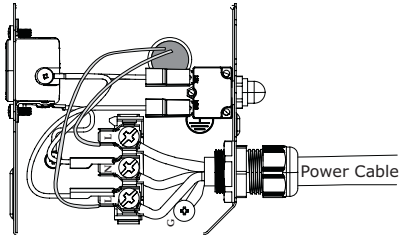


### 3-Wire Electrical Connection

If your receptacle is a 3-wire receptacle as shown below, you must obtain a 3-wire dryer cord. A dryer cord can usually be found at your local hardware supply, electrical supply or home center. Cord should have closed loop or upturned end wire terminating connectors. The cord kit must be marked “For Use with Clothes Dryers”.

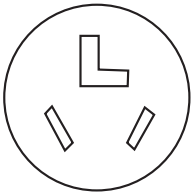

3- wire receptacle
( 10-30R)

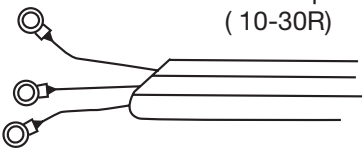

Typical 3- Wire Dryer Cord 240V/30 amp NEMA 10-30 Type SRDT

**WARNING!**

If the dryer is installed in a mobile home, recreational vehicles, new branch-circuit installations or in areas where local codes do not permit grounding through the neutral conductor, only a 4-wire power supply cord shall be used.

## To change the cord:

1. Make sure that the dryer is not plugged into any power outlet.

| | |
|---|---|
| ⚠ | DO NOT plug end of dryer power cord into a live receptacle before connecting dryer power cord to dryer terminals and closing junction/ splitter box as described below. |

| | |
|---|---|
| ⚠ | DO NOT repair old power supply cords. Power cord must be changed only by a qualified person. There is a risk of electric shock! |

2. Remove the screw from the cover of the junction box located at the top rear of the dryer.
3. Remove the red, white and black wire from the terminal block.
4. Remove the green ground wire from the ground terminal.
5. Loosen the strain relief clamp holding the 4-wire cable.
6. Thread the 4-wire cable out through the strain relief clamp.
7. Thread the new 3-wire dryer cord through the strain relief clamp.
8. Attach the power cord Ground conductor (the center wire) to the terminal labeled N. Connect the terminal labeled N and the Ground terminal labeled G. Tighten the terminals so that they securely hold the conductors.
9. Attach the two remaining power cord outer conductors to the 2 terminals labeled L. Tighten both screws so that the power conductors are securely held in place.
10. Tighten the strain relief so that the power cord cannot be moved.
11. Replace the cover on the junction box and fasten in place.

The dryer is now ready to be plugged into the 3-wire receptacle of the proper rating.

The receptacle should be located so that the plug and receptacle will be accessible with the dryer in its installed position.

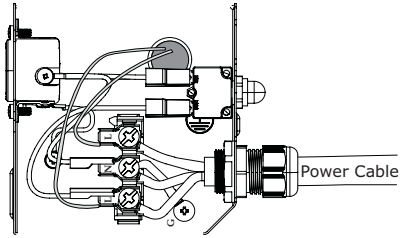


## 3.2 Grounding Instructions

This appliance must be grounded. In the event of malfunction or breakdown, grounding will reduce the risk of electric shock by providing a path of least resistance for electric current. This appliance is equipped with a cord having an equipment-grounding conductor and a grounding plug. The plug must be plugged into an appropriate outlet that is properly installed and grounded in accordance with all local codes and ordinances.

- Power cord plug must be within easy reach after installation.
- The voltage and the allowed fuse/breaker protection are specified in the section “Technical Specifications”.
- The stated voltage must match your mains voltage.
- Connection via extension cords or multi-plugs should not be made.
- The main fuse/breaker and switches must have a contact distance of minimum 3 mm.

| | |
|---|---|
| ⚠ | A damaged power cable must be replaced by a qualified electrician. |

| | |
|---|---|
| ⚠ | WARNING – Improper connection of the equipment-grounding conductor can result in a risk of electric shock. Check with a qualified electrician or service representative or personnel if you are in doubt as to whether the appliance is properly grounded. Do not modify the plug provided with the appliance: if it will not fit the outlet, have a proper outlet installed by a qualified electrician. |

| | |
|---|---|
| | The appliance must not be operated unless it is repaired! There is the risk of electric shock! |

## 3.3 Appropriate installation location

- Install your appliance in environments that have no risk of freezing and in a stable and level position.
- Do not place your appliance on a long pile rug or on similar surfaces.
- Operate your appliance in a well-ventilated, dust-free environment.
- Do not block the air ducts in front of and under the dryer.

| | |
|---|---|
| | Make sure that your appliance is not placed on the power cable. |

| | |
|---|---|
| | Keep at least 0.6” (1.5 cm) from the edges of other furniture. |

## 3.4 Minimum Installation Clearances

| | | Alcove or Built-under | Closet |
|---|---|---|---|
| A | Sides | 0.5 in. (13 mm) | 0.5 in. (13 mm) |
| B | Top | 1 in. (25 mm) | 1 in. (25 mm) |
| C | Rear | 0.5 in. (13 mm) | 0.5 in. (13 mm) |
| | Front | 0.20 in. (5 mm) | 0.20 in. (5 mm) |

### Ventilation Requirements

Closet door must have 2 openings, one located 3.2 inches (8 cm) from bottom of door having a minimum area of 16 sq. inches (103 cm2) and the other one located 3 inches (7.5 cm) from top of door having a minimum area of 46 sq. inches (294 cm2).

## 3.5 Use on top of a washer

- A stacking-kit (Part no: 2974640200) should be used between washer and dryer for use on top of a washer. The stacking-kit should be installed by the Authorized Service provider.
- Place the appliance on a solid floor. If it is to be placed on top of a washer, the approximate weight together may reach 397 lbs (180 kg) when they are full. Therefore, the floor must be capable of carrying the load placed on it!

## 3.6 Adjusting the feet

- In order to ensure that the dryer operates more silently and vibration-free, it must stand level and balanced on its feet. Balance the dryer by adjusting the feet.
- Turn the feet to left or right until the dryer stands level and firmly.

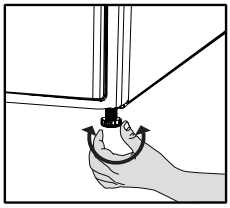

| | |
|---|---|
| | Never unscrew the adjustable feet from their housings. |

| | |
|---|---|
| | Dryer contains R290 refrigerant.*<br>R290 is an environment-friendly, but flammable refrigerant.*<br>Ensure that the air inlet of the dryer is open and it is well-ventilated.*<br>Keep potential flame sources away from the dryer.* |

## 3.7 Destroying packaging material

Packaging material can be dangerous to children. Keep the packaging materials out of the reach of children or dispose of them accordingly. Do not dispose of them together with normal domestic waste.
Packaging materials of your appliance are manufactured from recyclable materials.

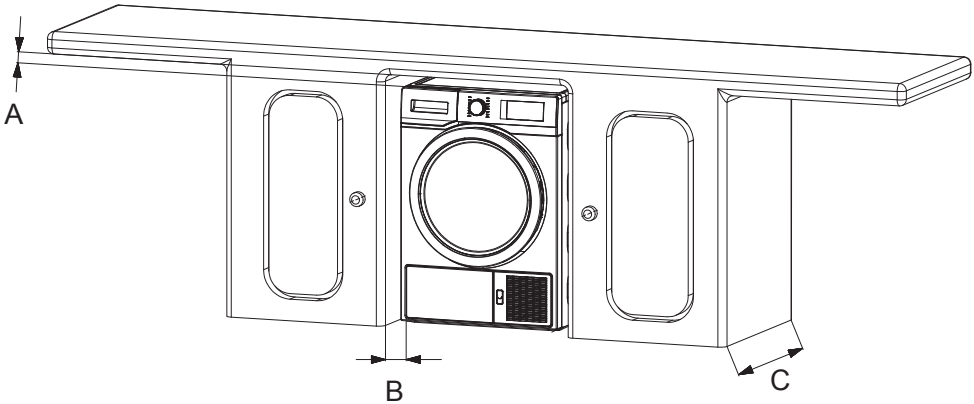


## 3.8 Connecting to the drain

In products equipped with condenser unit, water accumulates in the water tank during the drying cycle.

### Connecting the water drain hose

Connect one end of the drain hose supplied with the dryer to the connection point from where you removed the hose of the product in previous step.
Connect the other end of the drain hose directly to the wastewater drain or to the washbasin.

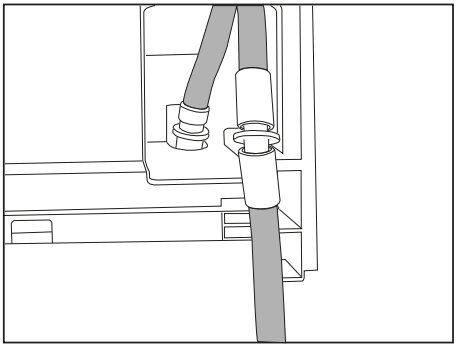

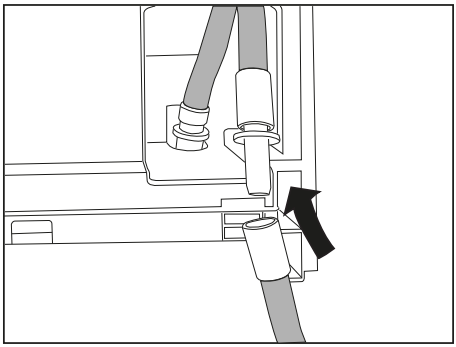

| | |
|---|---|
| ⚠ | Hose connection should be made in a safe manner. Your drain house will be flooded if the hose comes out of its housing during water discharge. |

| | |
|---|---|
| ℹ | Water drain hose should be attached to a height of maximum 80 cm.<br>Make sure that the water drain hose is not stepped on and it is not folded between the drain and the dryer. |

# 4 Preparation

| | |
|---|---|
| ⚠ | Read the “Safety Instructions” first! |

## 4.1 Laundry suitable for drying in drying machine

| | |
|---|---|
| **NOTE** | Laundry that are not drying machine safe may damage the appliance and the laundry during drying. Follow the instructions on the labels on the laundry to be dried. Only dry the laundry with “drying machine safe” written on their labels. |

## 4.2 Laundry not suitable for drying in drying machine

| | |
|---|---|
| **NOTE** | Undergarments with metal supports shall not be dried in drying machine. If these metal supports get loose and ripped from the garment, it may damage the machine.<br>Delicate embroidery textiles, cotton and silk garments, garments manufactured from delicate and valuable textiles, non breathing garments and tulle curtains shall not be dried in drying machine. |

## 4.3 Preparing the laundry to be dried

| | |
|---|---|
| **NOTE** | Items such as coins, metal parts, needles, nails, screws, stones etc. may damage the drum group of the product or may cause functional operation issues. Therefore check all laundry that will be loaded to the product.<br>Dry the laundry with metal accessories such as zippers by turning them inside out.<br>Close the zippers, hooks and clasps, button up the covers’ buttons, tie textile belts and apron belts. |

## 4.4 What to do for energy saving

- Use the highest possible wringing option as you wash the laundry. Therefore you can reduce the drying period and reduce energy consumption. Sort the laundry based on their types and thickness.
  Dry same types of laundry together. For instance kitchen towels and table cloths dry faster than bathroom towels.
- Follow the recommendations in the user manual for program selection.
- During drying do not open the loading door unless necessary. If you are required to open the loading door, do not keep it open for too long.
- Do not add wet laundry as the drying machine operates.
- Clean the Fibre Filter before and after each drying session.
- For condensation models, be sure to clean the condenser at least once a month or after each 30 drying sessions.
- Make sure the filters are clean. Refer to maintenance and cleaning for details.
- For models with flue, follow the flue connection rules specified in the guides and clean the flue.
- During drying session, properly ventilate the environment in which the drying machine is in.

- On models with heat pump, check the condenser at least every six months and clean it if it is dirty.
- If you are using environment friendly filter, you are not required to clean the filter after every cycle. When the environment friendly icon is lit on the screen, change the filter cloth.

## 4.5 Correct load capacity

If the laundry in the product exceed maximum load capacity, it may not operate as intended and may cause material damage or damage the product. For each program, follow the maximum load capacity.

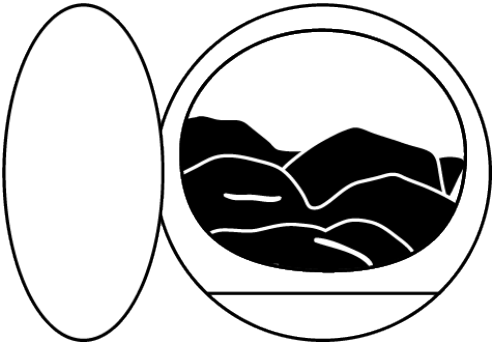

The weights below are provided as examples.

| Laundry | Approx. weight (g)* | Laundry | Approx. weight (g)* |
|---|---|---|---|
| Cotton bedding (double size) | 1500 | Cotton dress | 500 |
| Bedding (single size) | 1000 | Dress | 350 |
| Bed sheet (double size) | 500 | Denim | 700 |
| Bed sheet (single size) | 350 | Handkerchief (10 pcs) | 100 |
| Large table cloth | 700 | T-Shirt | 125 |
| Small table cloth | 250 | Blouse | 150 |
| Tea napkin | 100 | Cotton shirt | 300 |
| Bath towel | 700 | Shirt | 200 |
| Hand towel | 350 | | |

*Weight of dry laundry before washing.

# 5 Running the product

## 5.1 Control Panel

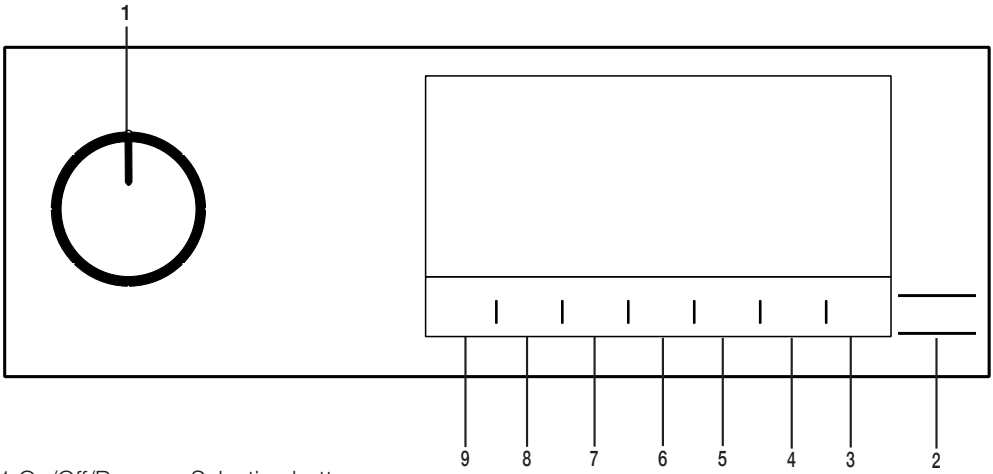


1.On/Off/Program Selection button.
2.Start / Stand-by button.
3.Remote control button.
4.End time selection button.
5.Steam level selection button.
6.Low temperature selection button and Time program selection button.
7.Audible warning and child lock selection button.
8.Wrinkle prevention selection button and drum light button.
9. Dryness level selection button.

## 5.2 Symbols

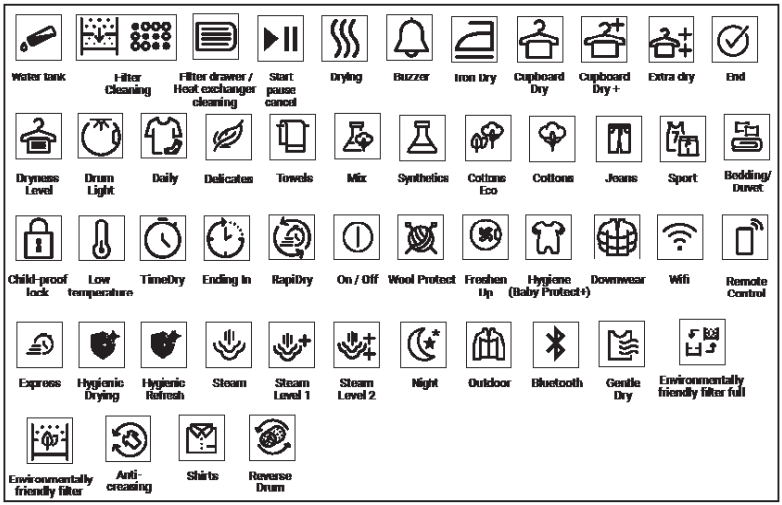

## 5.3. Preparation of drying machine

- Plug the drying machine.
- Open the loading door.
- Place the laundry to the drying machine without jamming them.
- Push and close the loading door.

| | |
|---|---|
| ⚠ | Ensure that no laundry is jammed to the loading door. |

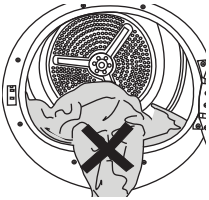

- Select the desired program by using On/Off/Program Selection button, the machine will turn on.

| | |
|---|---|
| ℹ | Selecting the program with the On/Off/Program Selection button does not mean that the program started. Press Start / Stand-by button to start the program. |

## 5.4 Program selection and consumption chart

| EN | | | | | | |
|---|---|---|---|---|---|---|
| Table of steam functioned cycles | | | | | | |
| Programmes | Programme Description | Weight (lb) | Spin speed in washer (rpm) | Drying Time (minutes) | Steam Drying Time | Energy Saver Cycle |
| Easy Iron | Is a cycle aimed to reduce the wrinkle level on shirts and t-shirts using a steam function. This cycle usually eliminates the need for ironing for casual shirts after drying. Depending on the texture and thickness of the product to be dried, the percentage of wrinkle reducing may vary. It is recommended to use this cycle combining the same types of fabrics. | 3,3 (6 pieces) | low | - | 90 | |
| | | 2,2 (3 pieces) | low | - | 70 | |
| | | 1,1 (1 pieces) | low | - | 50 | |
| Jeans | You may dry denim pants, skirts, shirts or jackets in this program. | 9 | high | 130 | 135 | |
| Gentle Care | Cotton laundries for daily purposes and synthetic laundries are suitable for this program. In order to get rid of wrinkles on laundries, Gentle Care program could be used. This program is suitable for only wet laundries | 3,3 (6 pieces) | low | - | 50 | |
| | | 2,2 (3 pieces) | low | - | 45 | |
| | | 1,1 (1 pieces) | low | - | 44 | |
| Mix | Use this programme to dry non-pigmenting synthetic and cotton laundry items together.Sports and fitness clothes may be dried with this program. | 9 | medium | 175 | 180 | |
| Cottons | You can dry your heat-resistant cotton textiles with this programme. A drying setting suitable for the thickness of the products to be dried and the desired level of dryness should be selected. | 18 | medium | 145 | 150 | |
| Cottons Eco | It dries single layer, casual cotton textiles and linen clothes in the most economical way. Please select “Normal” dryness level for Energy Saver Cycle. | 18 | medium | 135 | 140 | |
| Permanent Press | You can dry all your synthetic textiles with this programme. A drying setting suitable for the level of dryness you desire should be selected. | 4 | low | 70 | 75 | |

| Table of non-steam functioned cycles | | | | | | |
|---|---|---|---|---|---|---|
| SaniDry | It is the programme that you can dry your washed products you want to provide with extra hygiene (baby clothes, underwear, towels, etc.). It provides high hygiene for your textiles via heat effect. | 11 | low | 200 | - | |
| SaniRefresh | You can use this programme for your dry clothes and laundry that you want to provide with hygiene without washing them. It provides high hygiene for your dry textiles via heat effect. | 3 | - | 120 | - | |
| Silent | In this programme the level of noise emitted to the environment will be the lowest.With this program you can dry your cotton or synthetic blend clothes silently. | 18 | medium | 240 | - | |
| Timed Dry | You may select from time programmes between 10 and 160 minutes to achieve the desired drying level at low temperature. In this programme, tumble drier's operation lasts for the set time independently from the dryness of laundry. | - | - | - | - | |
| Quick Dry 30 min | Use this program to have 2 shirts ready for ironing. | 3 | high | 30 | - | |
| Bulky / Large Items | You can dry your feather or fibre filled textile that bears can be dried in drier label as a single piece of laundry. You can dry double duvet, pillow or coats as single piece of laundry. Dry your cloths such as coats and jackets turned inside out. | 6 | medium | 165 | - | |
| Ftiness Wear | Use it to dry your clothes made of synthetics, cotton or mixed fabrics or waterproof products such as functional jacket, raincoat etc. Turn them inside out prior to drying. | 9 | medium | 135 | - | |

| Downloaded Program | | | | | | |
|---|---|---|---|---|---|---|
| Bedding | Use to dry cotton and synthetic bedding sets. Provides drying for up to 2 double bedding sets | 7 | medium | 210 | - | |
| Underwear | It provides hygienic drying for your underwear via high temperature. | 4 | medium | 70 | - | |
| Towel | Drying towels such as kitchen towel, bath towel and hand towel. | 11 | medium | 175 | - | |
| Refresh (Wool Refresh) | Use this programme to ventilate and soften the woolen laundry that can be washed in the washing machine. Do not use to dry the laundry completely. Take out and ventilate the laundry immediately after the programme is over. | - | - | - | - | |
| Wool protect | Use this programme to dry woolen garments such as jumpers that are washed according to the instructions. It is recomended that garments would be removed at the end of the programme. | 3 | low | 148 | - | |

EnergySaverCycle

**Energy Saver Cycles provides the most energy savings.**

Allergy UK is the trademark of the British Allergy Foundation. The Seal of Approval has been created to guide people requesting an advice that the product significantly reduces the amount of the allergens in an environment where allergic people are present or the product restricts/reduces/ eliminates the allergens. The purpose is to provide evidence that the products have been scientifically tested or analysed to yield measurable results.

## 5.5 Auxiliary functions

### Dryness level

**Dryness level** button is used for adjusting to desired dryness. Program time may change depending on the selection.

You can activate this function only prior to start of program.

### Wrinkle prevention

If you will not take the laundry out immediately after the program has finished, you may use Wrinkle Prevention function to prevent wrinkling of your laundry. This function is disabled by default and can be enabled by pressing drum light button for 3 seconds.

### Audible warning

Drying machine makes an audible warning when the program is completed. Press the “Audible Warning” button if you do not want audible warning. When you press the audible warning button, the light goes off and it does not sound when the program is completed.

You can select this function before the program starts or after the program starts.**!**

### Low temperature

You can activate this function only prior to start of a program. You can activate this function if you want to dry your laundry at a lower temperature. The program duration will be longer after it becomes activated.

### Steam level

You can use this button to select the steam level or activate the steam function. This button can only be used in programs supported by the steam function. You can activate this function only prior to the start of a program. The program duration will be longer after it becomes activated.

### End time

You can delay the end time of the program up to 24 hours with end time function.

1.Open the loading door and place the laundry.

2.Select the drying program.

3.Press the End Time selection button and set the delay time you wish. End Time LED turns on. (When pressed and hold the button, End Time proceeds non-stop).

4.Press the Start / Stand-by button. End Time countdown begins. The “:” sign in the middle of displayed delay time flashes.

You can add or remove laundry within end time. Displayed time is the sum of normal drying time and end time. End Time LED turns off at the end of countdown, the drying starts and the drying LED turns on.

### Changing the end time

If you want to change the duration during the countdown:

Pause the program and Turn the On/Off/ Program Selection button and cancel the program. Select the desired program and repeat the End Time selection.

Cancelling the end time function

If you want to cancel the end time countdown and start the program immediately:

Pause the program and Turn the On/Off/ Program Selection button and cancel the program. Select the desired program and press the “Start/Pause” button.

### Drum Light

You can turn on and off the drum light by pressing this button. The light turns on when the button is pressed and turns off after certain time.

## 5.6 Warning indicators

| | |
|---|---|
| | Warning indicators may vary depending on the model of your drying machine. |

### Filter cleaning

When the program is completed, the warning indicator for filter cleaning turns on.

### Cleaning of filter drawer/heat exchanger

Warning symbol flashes periodically to remind that filter drawer must be cleaned.

## 5.7 Starting the program

Press the Start/Stand-by button to start the program.

Start/Stand-by and Drying indicators turn on to show that program started.

## 5.8 Child Lock

The drying machine has a child lock which prevents the program flow from being interrupted when the buttons are pressed during a program. When the Child Lock is activated, all buttons on the panel except the **On/Off/Program Selection** button are deactivated.

Press the Audible Warning button for 3 seconds in order to activate the child lock.

The child lock has to be deactivated to be able to start a new program after the current program is finished or to be able to interfere with the program. To deactivate the child lock, keep the same buttons pressed for 3 seconds.

| | |
|---|---|
| | When the child lock is activated, the child lock warning indicator on the screen turns on. |

When the child lock is active:

The drying machine runs, or in stand-by state the indicator symbols will not change upon changing the position of the program selection button.

| | |
|---|---|
| | When the drying machine is operating and the child lock is activated, double beep sound is heard when the program selector switch is turned. If the child lock is cancelled without turning the program selector button back to its original position, the program is terminated since the program selector button is turned. |

## 5.9 Changing the program after it is started

You can change the program you selected to dry your laundry with a different program after the drying machine starts running.

- For example, Pause the program and turn the On/Off/Program Selection button to select the Extra Dry program in order to select the Extra Dry program instead of Ironing Dryness.
- Press the Start/Stand-by button to start the program.

Adding and removing clothes during stand-by

If you want to add or remove clothes to/from the drying machine after the drying program starts:

- Press the Start/Stand-by button to put the drying machine in Stand-by state. The drying operation stops.
- Open the loading door while in Stand-by state, and close the door after you remove or add laundry.
- Press the Start/Stand-by button to start the program.

| | |
|---|---|
| | Adding laundry after the drying operation starts may cause the dried laundry inside the drying machine to mix with wet laundry and leave the laundry damp at the end of operation.<br>Adding or removing laundry during drying may be repeated as many times as you wish. But this operation continuously interrupts the drying operation, and thus increases program duration and energy consumption. So, it is recommended to add laundry before the program starts.<br>If a new program is selected by turning the program selection button while the drying machine is in stand-by, the running program terminates. |

| | |
|---|---|
| | Do not touch the inner surface of the drum while adding or removing clothes during a continuing program. The drum surface is hot. |

## 5.10 Cancelling the program

If you want to cancel the program and terminate the drying operation for any reason after the drying machine starts running, Pause the program and turn the On/Off/Program Selection button; the program terminates.

| | |
|---|---|
| | The inside of the drying machine shall be extremely hot when you cancel the program during machine operation, so run the refreshing program to allow it to cool down. |

## 5.11 End of program

When the program ends, the LED's of End/ Wrinkle Prevention and Fibre Filter Cleaning Warning on the program follow-up indicator turn on. Loading door can be opened and drying machine is ready for another operation.

Turn the On/Off/Program Selection button to On/Off position in order to turn off the drying machine.

| | |
|---|---|
| | If the Wrinkle Prevention mode is active and the laundry is not removed after the program is completed, the wrinkle prevention function activates for 2 hours to prevent the laundry inside the machine to get wrinkled. The program tumbles the laundry with 10-minute intervals to prevent them from wrinkling. |

## 5.12 Odour feature

If your drying machine has odour feature, read the ProScent manual to use this feature.

## 5.13 General Description of Steam Programs

### Steam cycles

You may use the steam function in cycles that are marked with a blue / red line in your machine panel. It is necessary to to use the dryer grouping your clothes depending on their types and thicknesses when you use a cycle with the steam function active. Do not dry wool, leather, or clothes that contain metal parts in this cycle. Extra noise may be generated during steam generation in steam cycles. Depending on the type, amount of laundry and the selected cycle, the result of wrinkle release and odour removal processes may differ. Upon completion of steam cycles, laundry should be immediately extracted from the machine and hung on a hanger.

### Getting the machine ready

Before using steam programs for the first time the steam tank needs to be filled. In the first use, 1-3 drying cycles must be made using a program other than the steam program.

### How to activate the steam cycle:

When you turn on the machine and the rotate the cycle navigator to the 'Ready to Wear' or 'Steam Refresh' cycles, the **High** icon located on display will turn on.

**High** icon indicates that you can run the drying cycle with a maximum load of 1.5 kg (6 pieces). To be able to dry 1 piece or 3 pieces of laundry, you need to tap the 'Steam' option on the screen to make the required adjustment in loading level settings.**(Mid / Low)**

Once you have made the required adjustments, you may start the cycle by pressing the Start/Hold button.

You will need to tap on the 'Steam' option on the screen to be able to activate the steam function in Blend, Jeans, Cotton, Economic Cotton, and Synthetic cycles. When you tap this button, steam function will be activated, and the cycle duration will change.

You may start the cycle by pressing the Start/Hold button when you see the **High** displayed and the steam function is activated.

| | |
|---|---|
| | If the steam tank is empty, High icon will blink. It is required to dry laundry in a cycle with the steam function inactive to fill the tank. |

## 5.14 HomeWhiz Function

Firstly, the homewhiz application should be installed on your phone.

The detailed information regarding the homewhiz application is available on https://www.homewhiz.com/

Turn on the bluetooth on your phone.

Switch the program selection button to Off mode.

Press the Dryness level and Remote Control keys together for 3 seconds. 3-2-1 appears on the screen during this time. Then the image below appears on the screen.

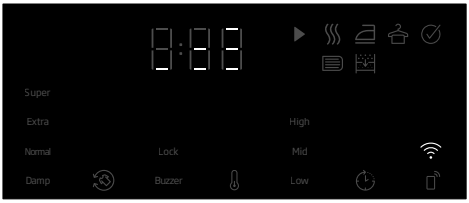


Select the product model to add from the application Devices->Add Device->Cleaning Devices->Dryer

Add the product stock number by selecting Wifi and Bluetooth.

The surrounding Wifi networks appear on the screen after selecting start to add, select the network to add and enter the network password.

The product screen is closed after the installation is completed and in the application, it is asked to select the room where the product will be added.

### Using the remote connection:

Switch the product to Download program mode, observe that the Wifi icon is illuminated if the Wifi is turned on in the product.

If the Wifi is off and the icon is not illuminated, press the remote control key for 3 seconds to turn on the Wifi.

Press the remote control key to allow remote control to the product while the Wifi is turne on.

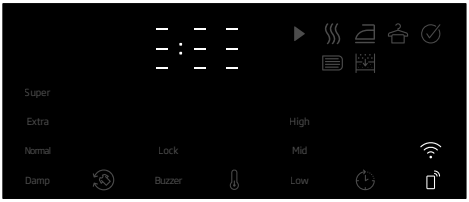


The product can be controlled remotely by entering the homewhiz application while the remote control is active

The detailed information regarding the homewhiz application is available on https://www.homewhiz.com/

### Deleting the product from network:

When the time delay and Wifi buttons are pressed for 5 seconds while the product is on, it counts down from 5 on the screen and when the beep is heard, the product is deleted from network and the Wifi is turned off.

| | |
|---|---|
| ⚠ | The remote control is cancelled when the door is opened.<br>The remote control is cancelled when the program button is turned<br>If the Wifi icon is illuminated continuously, it means that it is active and connected to network<br>If the Wifi icon is flashing continuously, it means that it is active and trying to connect to network. You cannot connect to the product unless it is illuminated continuously<br>The connection to the product is allowed if the remote control icon is active and the Wifi icon is illuminated continuously. |

## Getting the Homewhiz Application

You can get the Homewhiz application from the application stores of your device. You can use the below QR codes to access the applications faster.

Apple App Store for the devices with IOS operating system

Google Play Store for the devices with Android operating system

# 6 Maintenance and cleaning

## 6.1 Loading Door Inner Surface

The hair and fibres that are separated from the laundry during drying process is collected by the Fibre Filter.

| | |
|---|---|
| | Fibres are formed during wearing and washing clothes.<br>You can clean the filter slot with a vacuum cleaner. |

| | |
|---|---|
| | After each drying cycle, clean the fibre filter and the inner surface of the loading door. |

To clean the fibre filter:
- Open the loading door.
- Hold the first part (inner filter) of the two part fibre filter and remove it by pulling it upwards.
- Collect the hair, fibres and cotton balls with hand or with a soft cloth.
- Remove the second part (outer filter) by pulling it upwards.

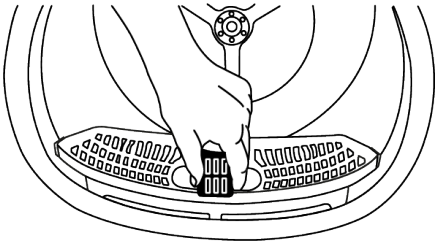

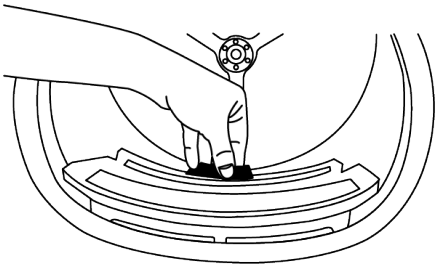

| | |
|---|---|
| | Ensure that hair, fibre and cotton balls do not fall into the slot where the filters are installed. |

- Open both filters (top and bottom filters) and to remove the lint with your hand, or use cleaning brush at air routing cover. And if necessary, use a vacuum cleaner to clean filters.

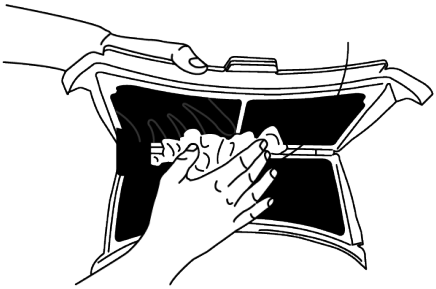

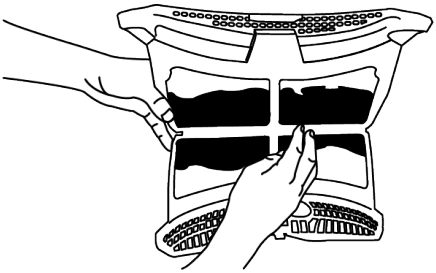

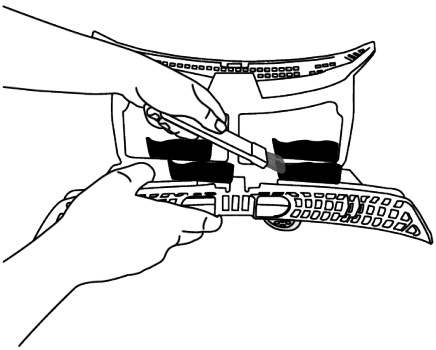

- Clean both filters under water running in reverse direction of fibre accumulation or with a soft brush. Dry the filter before placing it back.

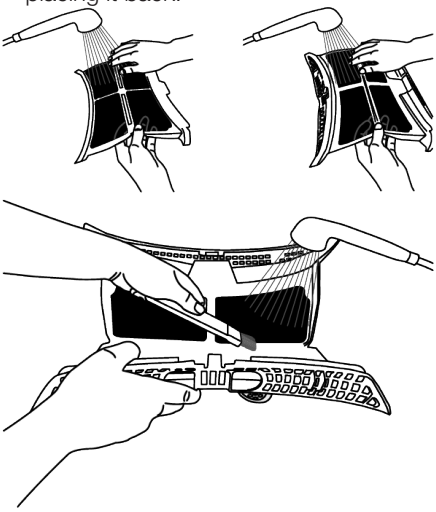

Insert the fibre filters on one another and place it back in its place.

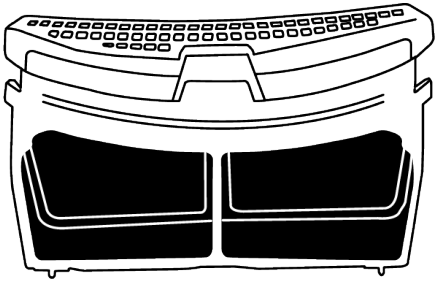

- Clean the front door interior surface and its gaskets with a soft damp cloth or with the brush on air routing cover.

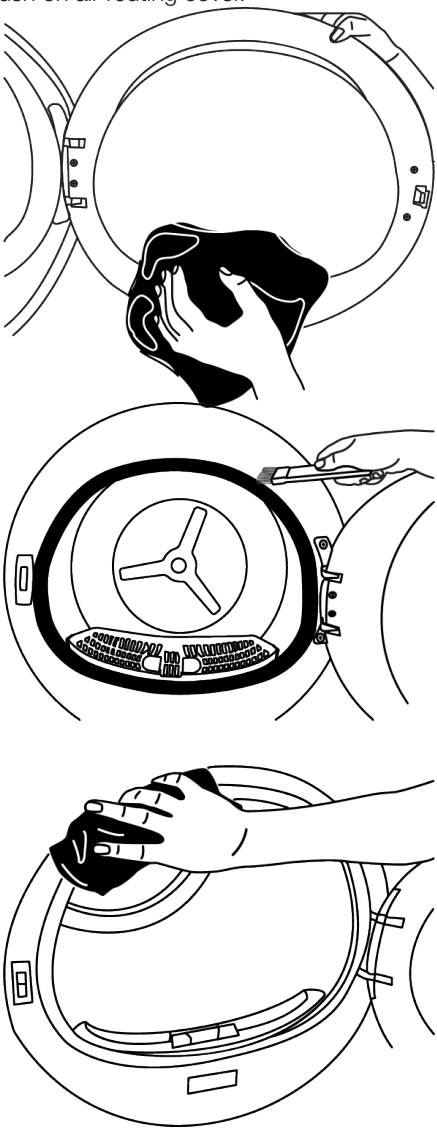

## 6.2 Cleaning the sensor

There are dampness sensors in the dryer that detect whether the laundry is dry or not.

To clean the sensors:

- Open the loading door of the dryer.
- Allow the machine to cool down if it is still hot due to the drying process.
- Wipe the metal surfaces of the sensor with a soft cloth, dampened with vinegar and dry them.

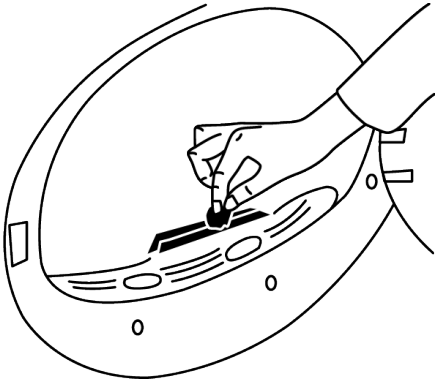

| | |
|---|---|
| | Clean metal surfaces of the sensors 4 times a year.<br>Do not use metal tools when cleaning metal surfaces of the sensors. |

| | |
|---|---|
| | Never use solvents, cleaning agents or similar substances for cleaning due to the risk of fire and explosion! |

## 6.3 Cleaning the condenser

The hair and the fibre that are not collected by the fibre filter accumulates on the metal surface of the condenser behind the air deflector. These fibres shall be cleaned regularly.

If the condenser cleaning icon blinks, check the metal surface. If there is any fibre, clean it. It must be checked at least every 6 months.

Open the toe board by pulling its button.

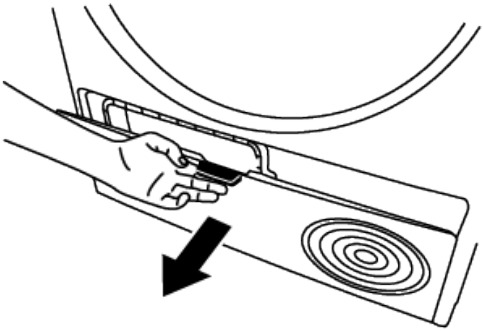

Move the latches to open the air deflector lid.

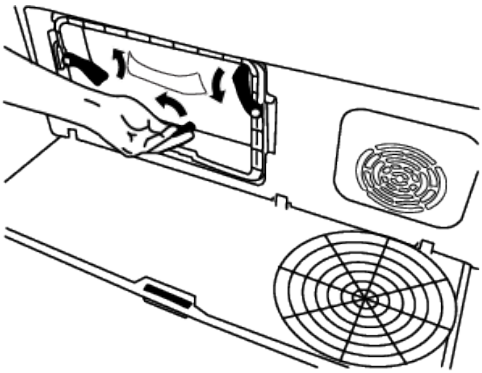

Pull the brush to the left to remove it. You can use the cleaning brush to clean filter, condensing metal surface and accumulated fibre on the door.

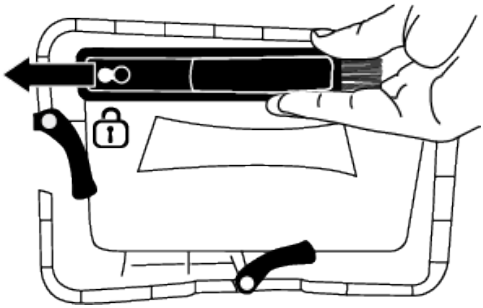

| | |
|---|---|
| | The cleaning brush is inside the documentation bag. Get your brush from the documentation bag and insert it to its place on the air deflector to store it. |

Clean the fibre on the metal surface of the condenser with damp cloth or the brush on the air deflector in up - down direction. Do not clean with left - right direction since it will damage the metal plates of the condenser.

You can use a vacuum cleaner with a brush for cleaning. If the vacuum cleaner does not have a brush, it is not recommended to be used for condenser cleaning.

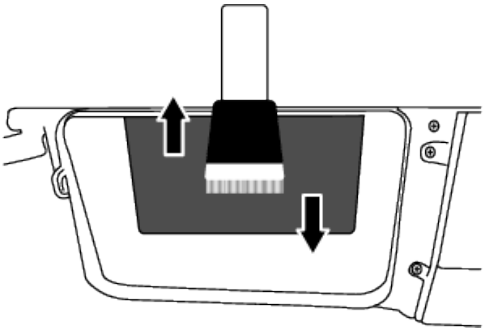

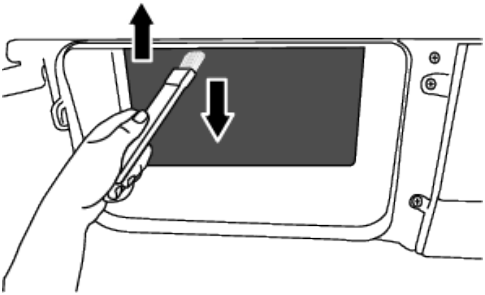

After cleaning the filter, door and the condenser, drag the brush to the right and lock it in its place.

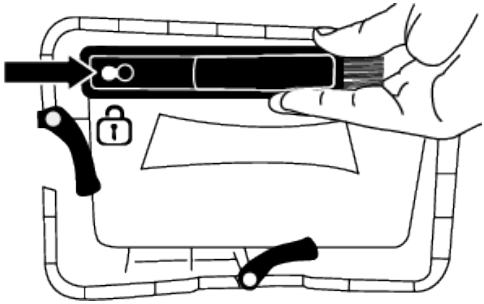

After the cleaning process is completed, place the air deflector cover to its place, move the latches to close it and close the toe board.

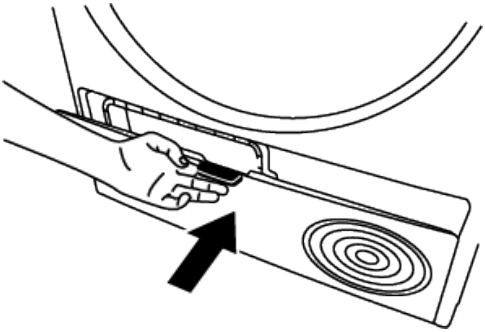

| | |
|---|---|
| | **Sharp Edges – To reduce the risk of injury, use care when cleaning the condenser or evaporator coil fins.** You can clean by hand, provided you wear protective gloves. Do not try to clean with bare hands. The condenser fins may damage your hands. Cleaning from left to right may damage the condenser fins. This may lead to drying issues. |

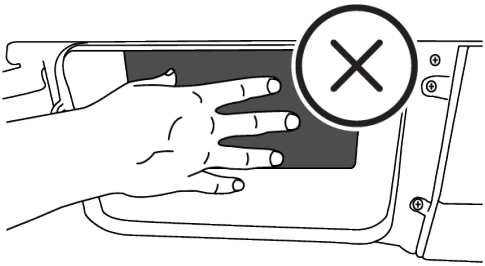

| | |
|---|---|
| ℹ | When the air deflector cover is removed, it is normal to have water at the plastic section in front of the condenser. |

If you see fibre accumulation on the fan cover and the toe board, remove with a cloth.

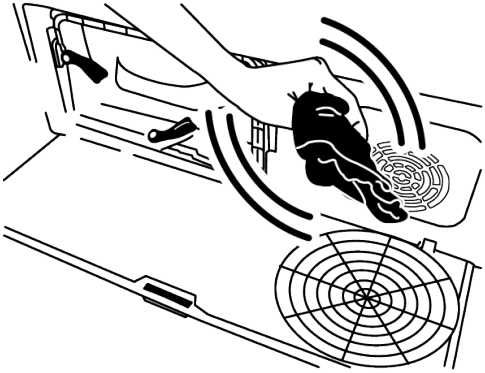

Do not have weight on the toe board when it is open.

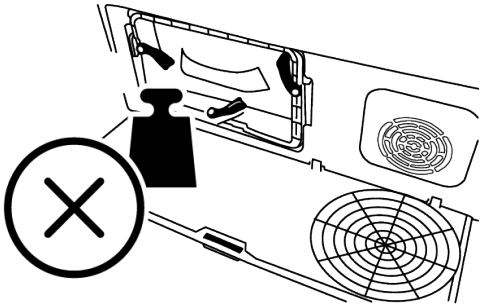

| | |
|---|---|
| **NOTICE** | Do not use abrasive materials or steel wool to clean the drum. |

# 7 Troubleshooting

| Drying operation takes too long. |
|---|
| Fibre filter (interior and exterior filter) pores may be clogged. >>> Wash the fibre filters with warm water and dry.<br>Evaporator front side may be clogged. >>> Clean the front side of the evaporator.<br>The ventilation grills in front of the machine may be closed. >>> Remove any object in front of the ventilation grills that blocks air.<br>Ventilation may be inadequate because the are the machine is installed in is too small. >>> Open the door or windows to prevent the room temperature from rising very high.<br>A lime layer may have accumulated on the humidity sensor. >>> Clean the humidity sensor.<br>Excessive amount of laundry might be loaded. >>> Do not load the drying machine excessively.<br>Laundry might not have been wrung adequately. >>> Perform a higher speed wringing on the washing machine. |
| Clothes come out damp after drying. |
| A program not suitable for the laundry type may have been used.>>> Check the maintenance labels on the clothes and select a program suitable for the clothes' type or use time programs as extra.<br>Fibre filter (interior and exterior filter) pores may be clogged. >>> Wash the filters with warm water and dry.<br>Evaporator front side may be clogged. >>> Clean the front side of the evaporator.<br>Excessive amount of laundry might be loaded. >>> Do not load the drying machine excessively.<br>Laundry might not have been wrung adequately. >>> Perform a higher speed wringing on the washing machine. |
| Drying machine does not turn on or program cannot be started. Drying machine does not run after it is configured. |
| Power plug might be unplugged. >>> Make sure the power cord is plugged in.<br>Loading door might be open. >>> Ensure that the loading door is properly closed.<br>A program might not be set or Start / Pause / Cancel button might not be pressed. >>> Check that the program is set and it is not in Pause position..<br>Child lock may be activated. >>> Turn off the child lock. |
| Program terminated prematurely for no reason. |
| Loading door might be closed completely. >>> Ensure that the loading door is properly closed.<br>There might be a power outage. >>> Press the Start / Pause / Cancel button to start the program. |

| Clothes have shrunk, hardened or spoiled. |
|---|
| A program not suitable with the laundry type might have been used. >>> Check the maintenance labels on the clothes and select a program suitable for the clothes. |
| Water drips from the loading door. |
| Fibres might have gathered on the inner sides of the loading door and the loading door gasket. >>> Clean the inner surfaces of the loading door and the loading door gasket surfaces. |
| Loading door opens by itself. |
| Loading door might be closed completely. >>> Push the loading door until the closing sound is heard. |
| The lighting inside the drying machine does not turn on. (In models with lamp) |
| The drying machine might not have been turned on using On/Off button. >>> Check that the drying machine is turned on.<br>Lamp might be malfunctioning. >>> Contact Authorized Service to replace the lamp. |
| Anti-crease icon is lit. |
| Anti-Crease mode that prevents the laundry in the drier to crease may be activated. >>> Turn the drier off and remove the laundry. |
| Fibre filter cleaning icon is lit. |
| Fibre filter (interior and exterior filter) may be unclean. >>> Wash the filters with warm water and dry..<br>A layer may be formed on the fibre filter pores that leads to clogging. >>> Wash the filters with warm water and dry. |
| An audible warning is heard from the machine |
| Fibre filters may not be inserted. >>> Insert the interior and exterior filters to their places.<br>Filters of the machine may not have been installed.>>> Install the fibre filters (internal and external) or the environmentally-friendly filter to their housing. |
| Evaporator warning icon is flashing. |
| Evaporator front side may be clogged with fibres. >>> Clean the front side of the evaporator.<br>Fibre filters may not be inserted. >>> Insert the interior and exterior filters to their places. |

| |
|---|
| The lighting inside the drying machine turns on. (In models with lamp) |
| If the drying machine is plugged to the power outlet, the On/Off button is pressed and the door is open; the light turns on. >>> Unplug the drying machine or bring the On/Off button to Off position. |
| Steam symbol is flashing.(For the products with a steam function) |
| Steam tank may be empty => Fill the steam tank with distilled or condensed water. |
| Steam programs do not start (For the products with a steam function) |
| Steam tank may be empty, steam tank warning icon may light up on the screen => Fill the steam tank until the steam icon goes off. |
| Wrinkles are not removed with wrinkle removing program. (For the products with a steam function) |
| Excess amount of laundry may have been placed => Place specified amount of laundry.<br>Steam application time may be selected in low level => Choose a program with high amount of steam.<br>After completion of the program, the laundry may have stayed in the machine for a long time => Take the laundry out as soon as the program finishes, and hang it out. |
| Laundry odour not lessened with the odour removal program.(For the products with an odour removal program) |
| Excess amount of laundry may have been placed => Place specified amount of laundry.<br>Steam application time may be selected in low level => Choose a program with high amount of steam. |

| | |
|---|---|
| ⚠ | If the problem persists after following the instructions in this section, contact your vendor or an Authorized Service. Never try to repair your product yourself. |

| | |
|---|---|
| ℹ | In an event that you encounter an issue on any part on your appliance, you can ask for a replacement by contacting the authorized service with the appliance model number.<br>Operating the appliance with non-authentic parts may lead the appliance to malfunction.<br>Manufacturer and distributor are not liable for malfunctions resulting from using non-authentic parts. |

# 8 Warranty Statement

## WARRANTY STATEMENT FOR THE BLOMBERG DRYERS

The warranties provided by Blomberg in these statements only apply to Blomberg dryers sold to the original purchaser or homeowner in the US and Canada. The warranty is not transferable. To obtain warranty service, please contact our nearest distributor as listed by state. You will need your dryer model number, serial number, retailer name and address, where purchased and purchase date / installation date. This warranty gives you specific legal rights, and you may also have other rights, which vary from state to state.

1 year *++ limited warranty from date of first installation Blomberg will repair or replace at no cost to the consumer any defective parts of the dryer if used under normal household conditions (warranty is void if the product is used commercially e.g., bed + breakfast, nursing home etc.). Service must also be performed by an authorized Blomberg service agency. (Cosmetic defects must be reported within 10 business days from installation)
The accessories have 1 year warranty but not labor. Consumer is responsible for labor to install accessory.

2 year * ++ limited warranty from date of first installation (Parts only) Blomberg will repair or replace any parts at no cost to the consumer if material defects or workmanship have caused the damage or failure of these components. Again the dryer must have been used under normal household conditions and not commercially as stated above (Labor charges are the responsibility of the consumer).

5 year * ++ limited warranty from date of first installation (parts only 2-5 years) Blomberg will repair or replace any circuit boards or dryer drum (excluding any plastic attachments) at no cost to the consumer if material defects or workmanship have caused the damage or failure of these components. The dryer must have been used under normal household conditions and not commercially (Labor charges are the responsibility of the consumer).

Lifetime limited warranty from date of first installation *++ (parts only) Blomberg will repair or replace to the original owner the stainless steel drum if rust through occurs under normal household use. Blomberg may,at its option, also replace the whole dryer with the same and/or equivalent model with equal or better functionality if the original model is no longer available. (Labor, removal and installation charges are the responsibility of the consumer.)

This product is fully tested and went through official quality assurance inspections before leaving the original manufacturing site. Warranty terms for this Blomberg household appliance is not valid if the product is altered, tampered, modifed, additional parts assembled, fixed and re-packed by an authorized distributor, servicer, a third party retailer, reseller or by any other unauthorized person(s)

Disclaimers of warranties and exclusions:

Warranty does not cover service costs by an authorized service agent to correct installation, electrical and plumbing problems or educational instruction on the use of the dryer. The warranty also does not cover defects or damage caused by an act of god (such as storms, floods, fires, mudslides, etc.), damage caused by use of the dryer for purposes other than those for which it was designed, misuse, abuse, accident, alteration, improper installation, maintenance, travel fees, service calls outside normal service hours, unauthorized service work or servicers.

TO THE EXTENT PERMITTED BY LAW, THIS WARRANTY IS IN LIEU OF ALL OTHER EXPRESSED AND IMPLIED WARRANTIES, INCLUDING THE IMPLIED WARRANTIES OF MERCHANTABILITY AND FITNESS FOR A PARTICULAR PURPOSE. BLOMBERG UNDERTAKES NO RESPONSIBILITY FOR THE QUALITY OF THIS PRODUCT EXCEPT AS OTHERWISE PROVIDED IN THIS WARRANTY STATEMENT. BLOMBERG ASSUMES NO RESPONSIBILITY THAT THE PRODUCT WILL BE FIT FOR ANY PARTICULAR PURPOSE FOR WHICH YOU MAY BE BUYING THIS PRODUCT, EXCEPT AS OTHERWISE PROVIDED IN THIS WARRANTY STATEMENT.

Blomberg does not assume any responsibility for incidental or consequential damages. Such damages include, but are not limited to, loss of profits, loss of savings or revenue, loss of use of the dryer or any associated equipment, cost of capital, cost of any substitute equipment, facilities or services, downtime, the claims of third parties, and injury to property. Some states do not allow the exclusion or limitation of incidental or consequential damages, so the above limitations or exclusion may not apply to you.

* Installation date shall refer to either purchase date or 5 business days after delivery of the product to the home, whichever is later.

++ Parts replaced will assume the identity of the original parts + their original warranty.

There are No Other Warranties. This Warranty Statement is the complete and exclusive warranty from the manufacturer. No employee of Blomberg or any other party is authorized to make any warranty statements in addition to those made in this Warranty Statement.

## HOW TO GET SERVICE

Please contact the Distributor for your State or Province as listed on the Distributor Contact List, or call our Toll Free Number at 1 800 459 9848 for direction to an Authorized Blomberg Service Agent or contact via http://www.blombergappliances.com