Blomberg®

seit 1883

Dishwasher

User manual

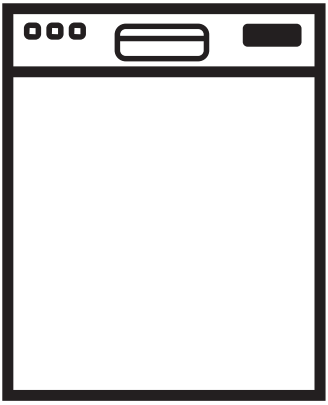

DWT 52600 WIH

DWT 52600 SSIH

DWT 52600 BIH

Dishwasher

User manual

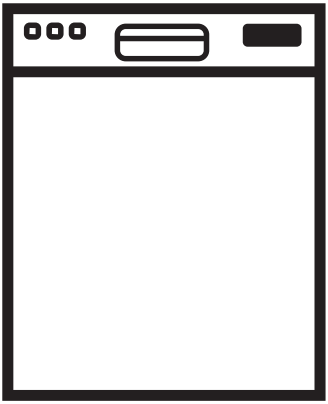

DWT 52600 WIH

DWT 52600 SSIH

DWT 52600 BIH

To prevent accidents, which could cause serious injury or death, as well as machine damage read these instructions before installation and / or use.

CONTENTS

1. IMPORTANT SAFETY INSTRUCTIONS 1

2. RECYCLING 3

3. GETTING TO KNOW YOUR DISHWASHER 4

4. LOADING THE DISHWASHER 5

4.1 UPPER RACK 8

4.2 LOWER RACK 11

4.3 PROPER AND IMPROPER LOADING OF DISHWARE 17

5. WHAT SHOULD NOT BE WASHED IN YOUR DISHWASHER 18

6. OPERATING THE PRODUCT 19

6.1 KEYS 20

6.2 PREPARING THE MACHINE 20

6.3 PROGRAMME SELECTION 20

6.4 AUXILIARY FUNCTIONS 22

6.4 PROGRAMMING THE WASHING TIME 24

6.5 STARTING THE PROGRAMME 25

6.6 CHILD (KEY) LOCK 26

6.7 CANCELLING THE PROGRAMME 26

6.8 SALT INDICATOR ( ) 26

6.10 END OF PROGRAMME 27

6.11 WATER CUT-OFF WARNING 27

6.12 OVERFLOWING WARNING 27

7. DETERGENT 28

7.1 ADDING DETERGENT 28

7.2 TABLET DETERGENTS 29

7.3 RINSE AID 30

8. ADJUSTING THE WATER SOFTENING SYSTEM 31

9. FILLING THE DISHWASHER SALT DISPENSER 32

10. CARE AND MAINTENANCE 34

10.1 CARING FOR YOUR DISHWASHER EXTERIOR 34

10.2 CARING FOR YOUR DISHWASHER INTERIOR 34

10.3 CLEANING THE FILTERS 35

10.4 CLEANING THE HOSE FILTER 36

10.5 CLEANING THE WASH ARMS 36

11. TROUBLESHOOTING 37

12. TECHNICAL FEATURES 42

13. WARRANTY STATEMENT FOR THE BLOMBERG DISHWASHERS 43

14. HOW TO GET SERVICE 45

INTRODUCTION

Please read this user manual and particularly the safety instructions completely and carefully. They will save you time and effort and help to ensure optimum dishwasher performance.
Be sure to observe all listed warnings and cautions. Look particularly for the icons with exclamation marks inside.
The information icon will also provide important references.

⚠	**WARNING:** Indicates a potentially hazardous situation which, if not avoided, could result in death or serious injury.
⚠	**CAUTION:** Indicates a potentially hazardous situation which, if not avoided, may result in injury. It may also be used to alert against unsafe practices.
ℹ	**NOTICE:** Indicates a potentially hazardous situation which, if not avoided, may result in damage to the dishwasher, the table-ware, the equipment or the environment.

1. IMPORTANT SAFETY INSTRUCTIONS

⚠	**WARNING:**When using the dishwasher, follow basic precautions, including the following: Read all instructions before using the dishwasher! Save these operating instructions and pass them on to any future user.

⚠	“This device complies with Part 15 of the FCC Rules. Operation is subject to the following two conditions: (1) this device may not cause harmful interference, and (2) this device must accept any interference received, including interference that may cause undesired operation.” “No changes shall be made to the equipment without the manufacturer’s permission as this may void the user’s authority to operate the equipment”

- Use the dishwasher only for its intended purpose as described in this user manual. This appliance is intended for normal household use only.
- **The manufacturer disclaims responsibility for damage or injury caused by improper use of this appliance.**
- The information in this user manual must be followed to minimize the risk of fire or explosion and to prevent property damage, personal injury or loss of life.
- Do not operate your dishwasher unless all the enclosure panels are properly in place.
- Do not tamper with the controls.
- Do not abuse, sit on, stand in or on the door or dish rack of the dishwasher.
- The cup racks are designed to support cups, glasses and kitchen utensils. When the cup racks are in the dishwasher do not lean on or use the cup racks to support your body weight.

- To reduce the risk of injury, do not allow children to play in, on or near the dishwasher.
- Use only detergents or rinse aids recommended for use in a household dishwasher and keep them in a dry place out of the reach of children. Check that the detergent dispenser is empty after the completion of each wash program.
- Dishwasher detergents contain chemicals that can cause sickeness and may be if they are inhaled or swallowed. Also, be careful when opening the door due to hot steam that is producded during operation. Consult a doctor immediately if detergent has been swallowed or inhaled.
- if the hot water has not been used in several weeks, we recommend running the hot water taps to remove any built up hadrogen gases.
- Do not store or use flammable liquids or vapors in the area of the dishwasher.
- When loading items to be washed, position sharp items so that they are not likely to damage the door seal and load sharp knives with the handles up to reduce the risk of cut-type injuries.
- Do not wash plastic items unless they are marked “dishwasher safe” or the equivalent. For plastic items not so marked, check the manufacturer’s recommendations.
- If a malfunction occurs, switch off the appliance and turn off the water supply to the dishwasher.
- Please do not attempt to carry the dishwasher by yourself in order to avoid potential injuries. Two or more people are needed to move a dishwasher.
- Before cleaning or carrying out maintenance, switch off the appliance, disconnect the power plug and turn off the water supply.
- Repairs and technical modifications must be carried out exclusively by a Authorized technician.
- If the dishwasher is not in use for an extended period of time (i.e. vacation home), we recommend remove all items from the dishwasher, leave the door cracked open to allow air to circulate and turn off both the power and water supply to the dishwasher.
- This appliance comes with a three prong NEMA 5-15P 15A power cord. It must be connected to a Grounded and Polarized wall receptacle that has been installed and tested by an licensed electrician and that it has been installed based on all Local, State and Federal Electrical codes.

WARNING: Improper connection of the equipment-grounding conductor can result in a risk of electric shock. Check with a qualified electrician or service representative if you are in doubt whether the appliance is properly grounded. Do not modify the plug provided with the appliance, if it will not fit the outlet, have a proper outlet installed by a qualified electrician.

- This appliance produces ozone within the washing compartment during normal operation. Long-term exposure to ozone or exposure at elevated levels may

result in respiratory problems, especially for the infirmed, elderly and children.

- Chidren should not operate this machine without adult supervision.
- Be Careful to not leave the door fully open when not being loaded or unloaded to prevent someone from tripping on the unit.

WARNING: If your dishwasher is equipped with internal illumination, lamp should only be replaced by the Authorized Service Agent in case of failures that may occur on the lamp.

WARNING: This product can expose you to chemicals including Nickel (Metallic) which is known to the State of California to cause cancer.

For more information go to www.P65Warnings.ca.gov

Note: Nickel is a component in all stainless steel and some other metal components.

SAVE THESE INSTRUCTIONS

- Service should be performed by a qualified installer. Work by unqualified persons could be dangerous and may void the warranty.
- Do not operate the appliance if damaged, malfunctioning, partially disassembled or if it has missing or broken parts.
- Before installation or service, disconnect the power supply to the work area by unplugging the unit, “tripping” the circuit breaker or removing the fuse.
- For safety reasons, dishwasher must be secured to adjacent cabinetry using the brackets provided. Failure to do this may cause damage to property or bodily injury.
- Do not use any extension cord or portable outlet device to connect the dishwasher to a power supply.

2. RECYCLING

- Remove the door to the washing compartment when removing an old dishwasher from service or discarding it. Ensure that the appliance presents no danger to children while being stored for disposal.
- Remove the door lock or door of the washing compartment before disposing dishwasher so that children or small animals can not trapped inside.
- Old appliances may contain materials that can be recycled. Please contact your local recycling authority about the possibility of recycling these materials.
- Please check the water supply line periodically. It is susceptible to breakage. It becomes less flexible as time goes by.Replace it immediately when it is torn, cut, swollen or there is water leakage.
- Please keep the dishwasher package out of the reach of children after unpacking it.

WARNING: Danger of suffocation! Ensure that any plastic wrappings, bags, small pieces etc. are disposed of safely and kept out of the reach of children.

3. GETTING TO KNOW YOUR DISHWASHER

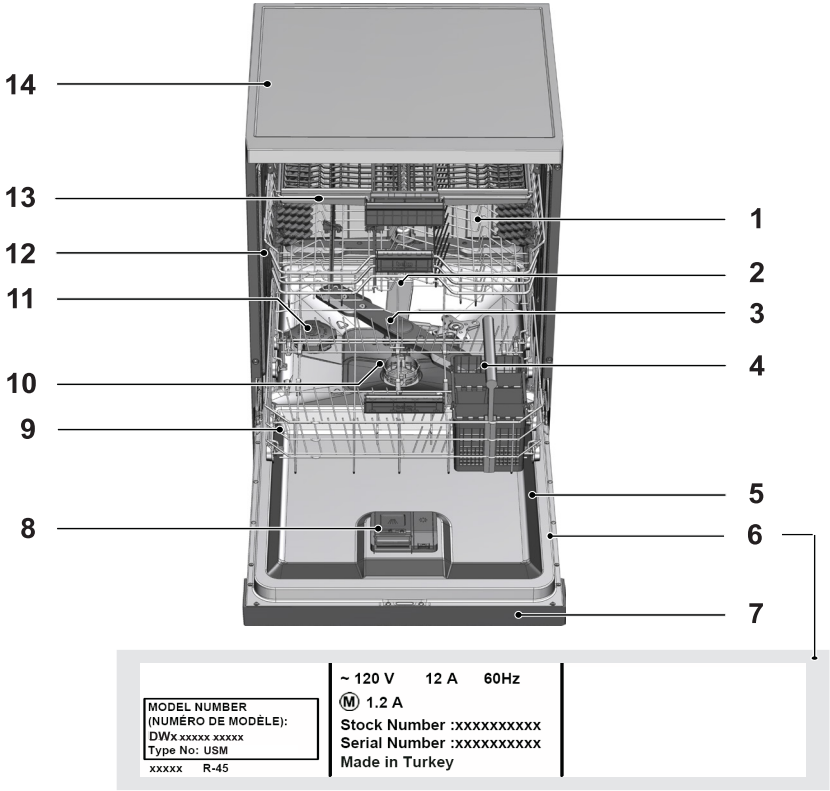

1. Upper basket
2. Upper impeller
3. Lower impeller
4. Cutlery basket
5. Door
6. Model and Serial Tag
7. Control panel
8. Detergent and rinse agent dispenser
9. Lower basket
10. Filters
11. Salt container (Select Models)
12. Upper basket rail
13. Upper cutlery basket (Select Models)
14. Tabletop (Select Models)
15. Turbo fan heat drying system (Select Models)

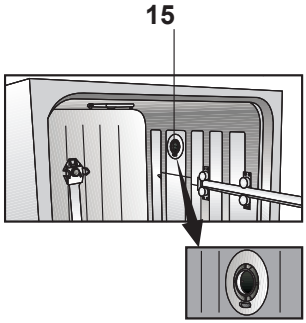

4. LOADING THE DISHWASHER

1. Pull the handle to open the door. If the door is opened during operation, the dishwasher will stop running. Once the door is closed the program will continue.
2. Remove coarse food leftovers from tableware.
3. Now you can load the dishwasher.

Upper rack (Standard Pattern)

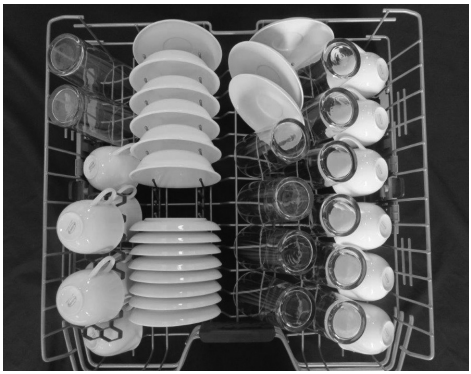

Top rack load pattern for 12 place settings according to the AHAM DW-1 Standards

Lower rack (Standard Pattern)

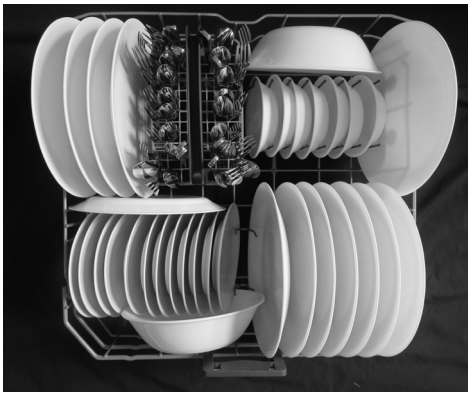

Bottom rack load pattern for 12 place settings according to the AHAM DW-1 Standards

Upper rack (International Pattern)

International Loading Pattern – Top rack (12 place settings)

Lower rack (International Pattern)

International Loading Pattern – Bottom rack (12 place settings)

Upper cutlery basket (Select Models)

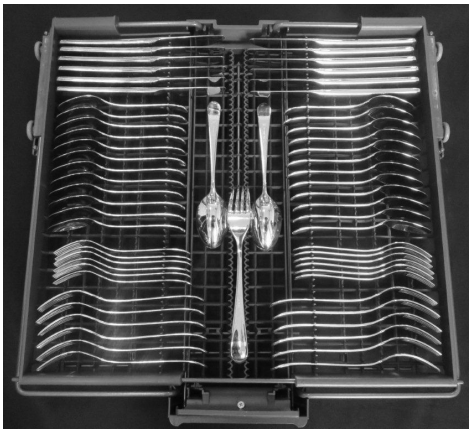

International Loading Pattern – Upper cutlery basket (12 place settings)

Upper rack (Select Models)

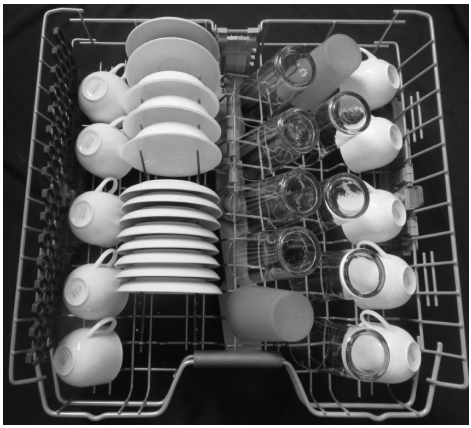

Additional Loading Pattern – Top rack (10 place settings)

Lower rack (Select Models)

Additional Loading Pattern – Bottom rack (10 place settings)

Upper cutlery basket (Select Models)

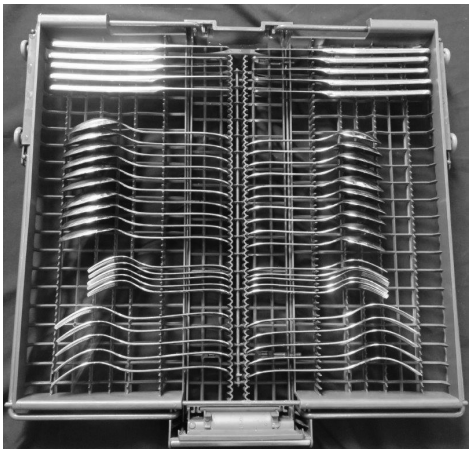

International Loading Pattern – Upper cutlery basket (10 place settings)

CAUTION: Large knives and other utensils with sharp tips and edges must be placed horizontally into the upper rack due to risk of injury. Other smaller knives and sharp utensils should be placed with sharp side down in the cutlery basket.

CAUTION: Use extreme caution when removing knives and other sharp utensils from the dishwasher. These items may have shifted position during the wash program, and may be wet or slippery.

CAUTION: Hot steam can escape! Danger of serious burns or other injury.

NOTICE: 3rd basket should be removed out of the dishwasher during the tests according to AHAM DW-1.

- Your dishwasher holds a maximum of 12 place settings.
- Place all containers such as cups, glasses and pots into the dishwasher with the opening facing downwards (so that no water can collect).
- Small and light items can go into the upper rack.
- Long and narrow items are placed in the middle of the racks.
- Place all large and very dirty items in the lower rack.
- Load dishes accordingly and be careful when loading glasses so they do not hit each other during the wash cycle. Also, make sure that both wash arms are not in contact with any dishware.
- Do not overload your dishwasher and pay attention to manufacturer instructions regarding dishes which are appropriate for use in for a dishwasher. Only with suitable dishes (mentioned in section 5) will you obtain optimal washing results with a sensible use of energy.

4.1 UPPER RACK

Load the upper rack with dessert plates, cups, glasses etc.

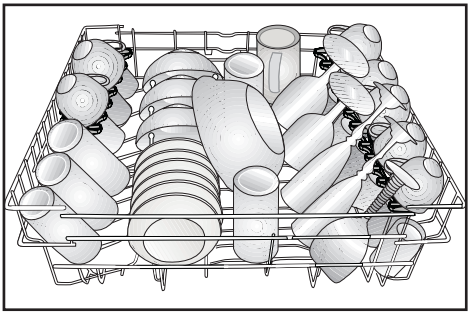

ADJUSTABLE SHELVES

(Select Models)

Depending on the size of the glasses and cups, the shelf height setting may be adjusted.

1. Fold the shelf upwards **A**.
2. Positioning at the desired height **B**.
3. Fold the shelf again downwards **C**.

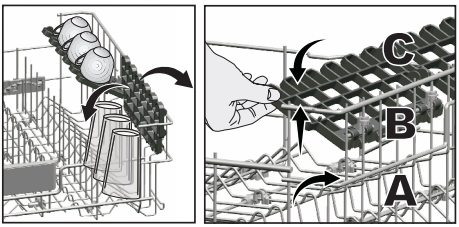

COLLAPSIBLE UPPER BASKET WIRES

(Select Models)

You can use collapsible wires when you need a larger space for your dishes in the upper basket of your machine.

To bring the collapsible wires into horizontal position, grab the wire from the middle position and push them in the direction of arrow in the figure. Place your larger dishes into the area created. To bring the wires back to vertical position, just lift them up.

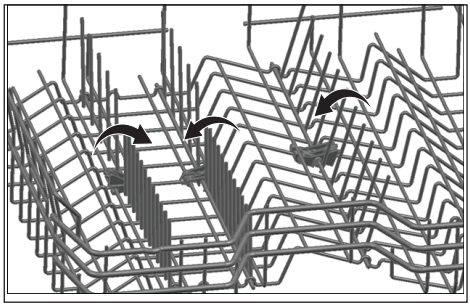

Bringing the wires to the horizontal position by holding them from the tips may cause them to bend. Therefore, hold the wires from their stems while bringing them to the horizontal or vertical positions.

UPPER BASKET MULTIPURPOSE SERVICE RACK

(Select Models)

This accessory located at the upper basket of your machine allows you to easily wash pieces such as extra long ladles and bread knives.

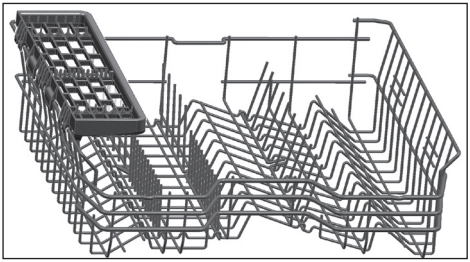

You can lift up the upper basket multipurpose service rack to remove it if you do not want to use it.

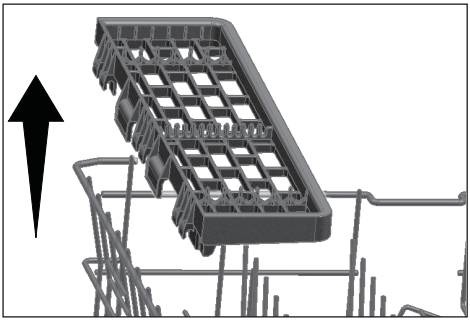

If you want to use the upper basket multipurpose service rack again, you can easily attach it to the side section of your upper basket.

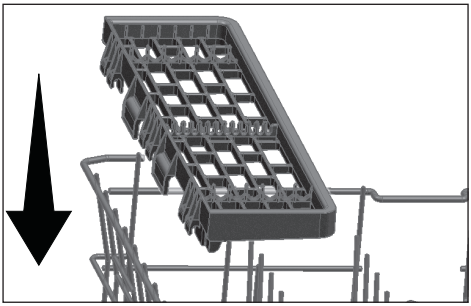

ADJUSTING THE HEIGHT OF THE UPPER BASKET

(Select Models)

The upper basket height adjustment mechanism has been designed for you to create large spaces in the lower or upper sections of your machine depending on your needs by adjusting the height in the upper or lower direction while your basket is empty or loaded.

Thanks to this mechanism, you can use your basket in three different positions, namely lower, middle and upper positions (1, 2, 3).

1. To raise your basket, hold the upper basket wires with both hands while the basket is in the lowermost position and pull them up (A).
2. You will hear a "Click" from the right and left mechanisms, indicating that the basket has reached the next level. Release the basket.

Repeat the process if the height is not sufficient.

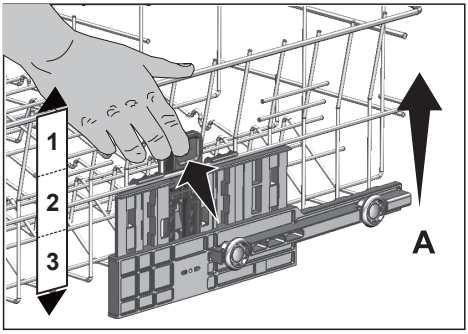

To lower the basket, while it is in the uppermost position;

1. Hold the upper basket wires with both hands, slightly lift up the basket and simultaneously push and release the latches shown in the figure (B).
2. Lower the basket from its current position to the lower one.
3. Release the basket after it has reached one level down.

Repeat the process if the height is not sufficient.

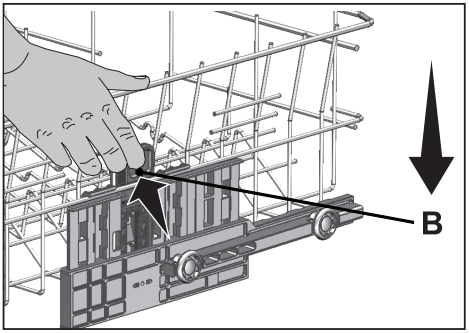

i	The movement mechanism may not function properly if the upper basket is overloaded or if the weight distribution is not balanced. In heavier conditions, there is the risk of falling one level down.

i	Make sure that the adjustment mechanism has the same positions on the right and left sides of the upper basket.

HEIGHT SETTING

(Select Models)

In certain models, the height setting of the upper rack may be changed using the wheels which are present at two height levels.

⚠	**CAUTION:** Make sure that the rack is empty. Changing the height setting while the rack contains tableware could cause the contents to dislodge, causing personal injury or damage to the tableware.

1. Release the latches on both the right and left tracks of the upper rack by turning them to the outside **A.**

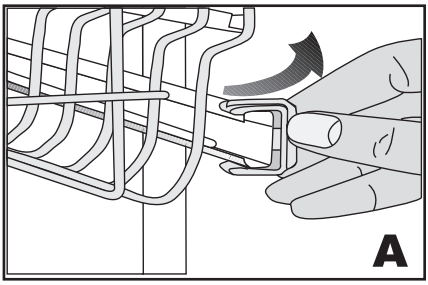

2. Pull out the rack completely **B**.

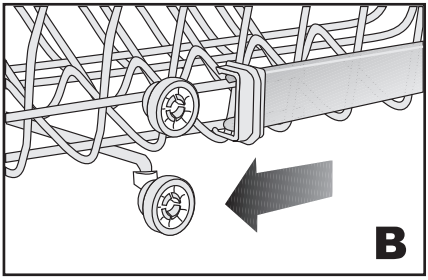

3. Place the rack into the tracks again at the desired height **C**.

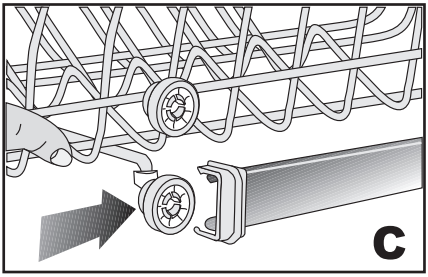

4. Push the latches back into the correct position.

4.2 LOWER RACK

Use the lower rack for plates, bowls, pots etc.

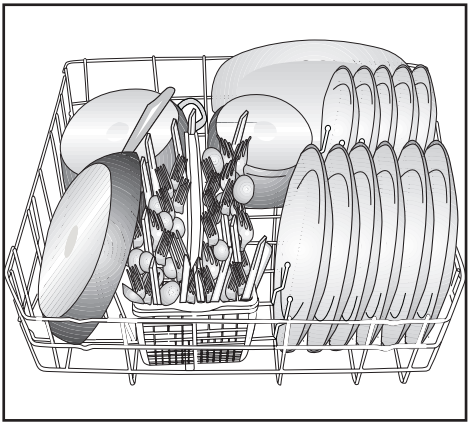

COLLAPSIBLE LOWER BASKET TINES

(Select Models)

There are foldable tines (A) located at the lower basket of the machine are designed for an easier placement of large pieces such as pans, bowls, etc. You can create larger spaces by folding each tines individually or all of them at once.

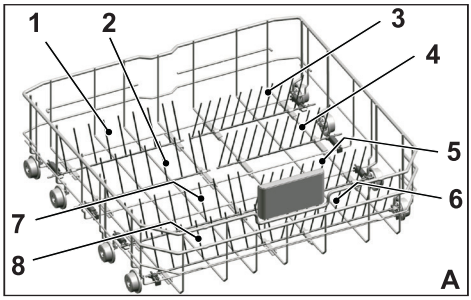

To bring the collapsible tines into horizontal position, grab the tines from mid position and push them in the directions of arrows (B). To bring the tines back to vertical position, just lift them up. Collapsible tines will click into the latch again (C).

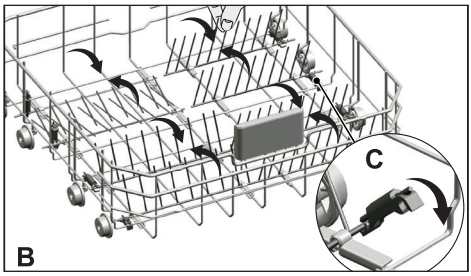

Bringing the tines to the horizontal position by holding them from the tips may cause them to bend. Therefore, it will be appropriate to bring the tines in the middle to horizontal or vertical position by holding them from their stems and pushing in the direction of arrow.

COLLAPSIBLE LOWER BASKET TINES

(Select Models)

There are foldable tines (A) located at the lower basket of the machine are designed for an easier placement of large pieces such as pans, bowls, etc. You can create larger spaces by folding each tines individually or all of them at once.

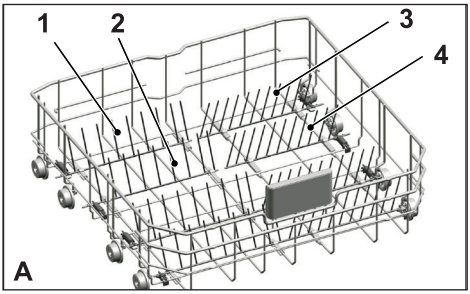

To bring the collapsible tines into horizontal position, grab the tines from mid position and push them in the directions of arrows (B). To bring the tines back to vertical position, just lift them up. Collapsible tines will click into the latch again (C).

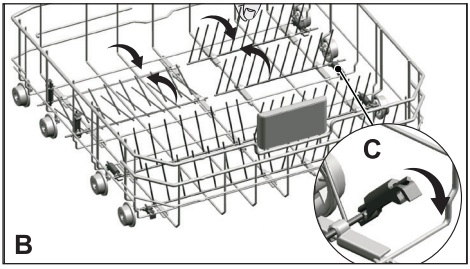

Bringing the tines to the horizontal position by holding them from the tips may cause them to bend. Therefore, it will be appropriate to bring the tines in the middle to horizontal or vertical position by holding them from their stems and pushing in the direction of arrow.

SILVERWARE BASKET

(Select Models)

Silverware basket is designed to wash your dishes such as knife, fork, spoon, etc. in an efficient manner.

Since the silverware basket can be moved (A, B), you can create more space while placing your dishes in the lower basket and free up space for your dishes of different sizes.

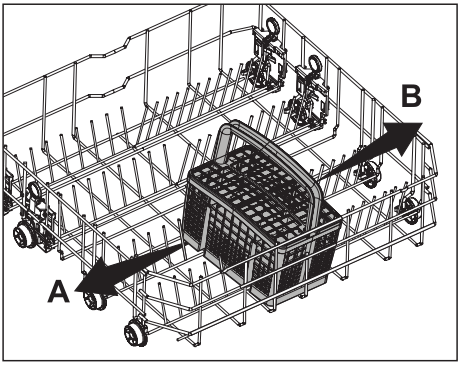

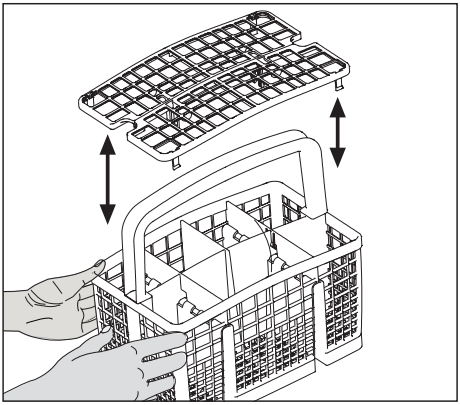

SILVERWARE BASKET

(Select Models)

Silverware basket is designed to wash your dishes such as knife, fork, spoon, etc. in a cleaner manner.

Since the cutlery basket can be moved (A, B), you can create a wider space while placing your dishes to the lower basket and free up space for your dishes in different sizes.

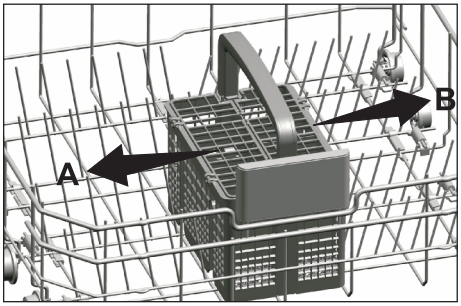

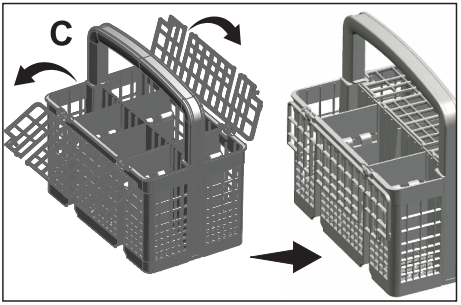

NOTICE: When finished, test to ensure that the spray arm can still move freely.

TRAY WASH SUPPORTS

(Select Models)

Use the supports to wash trays in the bottom basket.

See the Auxiliary functions section for appropriate program and function selection.

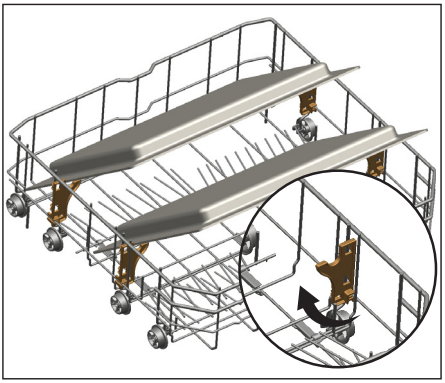

LOWER BASKET GLASS HOLDER

(Select Models)

Lower Basket Glass Holder found in the lower basket of your machine enables a safe washing for your oversized and tall glasses.

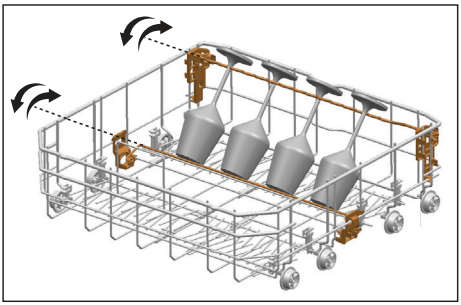

SOFTTOUCH ACCESSORY

(Select Models)

The SoftTouch Accessory found in the lower basket of your machine enables a safe washing for your fragile glasses.

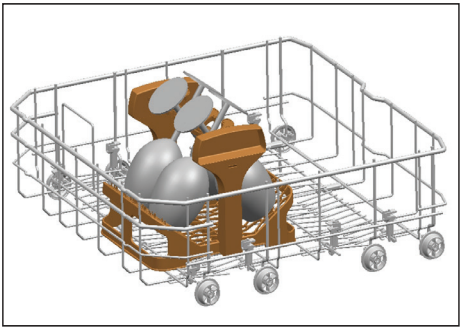

LOWER BASKET BOTTLE WIRE

(Select Models)

The bottle wire is designed for easier washing of long pieces with wide mouths. You may take out the bottle wire from the basket when not in use by pulling it out from both sides (H).

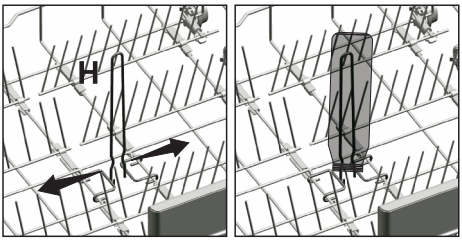

LOWER BASKET MULTIPURPOSE / HEIGHT ADJUSTABLE SERVICE RACK

(Select Models)

This accessory located at the lower basket of your machine allows you to easily wash pieces such as extra glasses, long ladles and bread knives.

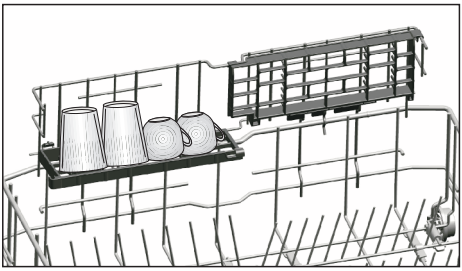

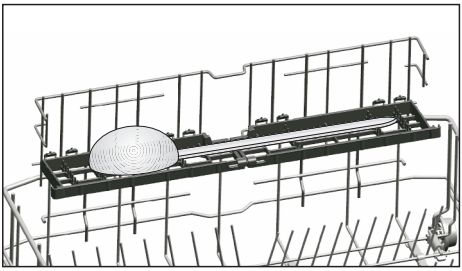

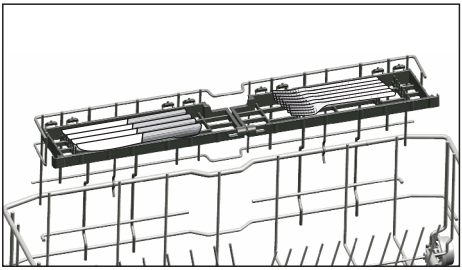

	You may use the racks as required by moving them to lower or upper position, or close them to create a wider space in your lower basket.
	Make sure that the impeller does not touch the dishes you placed on the racks.

CEILING CUTLERY BASKET

(Select Models)

Ceiling cutlery basket is designed to wash your cutlery items such as forks, spoons and etc. by placing them between the bars on the basket.

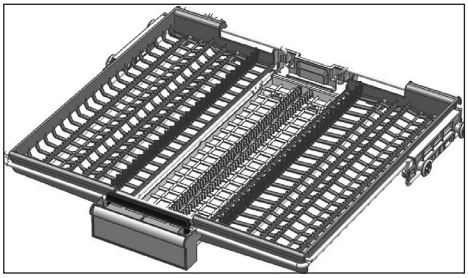

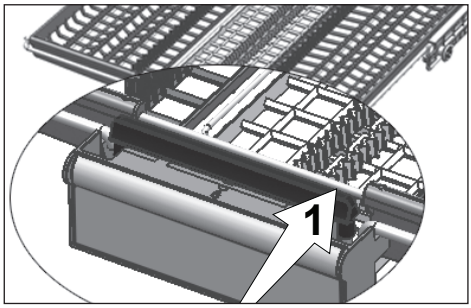

In models with partial movement feature, pushing the bar (1) on the handle enables the central tray of the basket to get to the lower position and the system gets unlocked. Thus right and left side trays can be used as moving parts.

The free space enabled by the side trays allows long parts to be loaded in the upper basket.

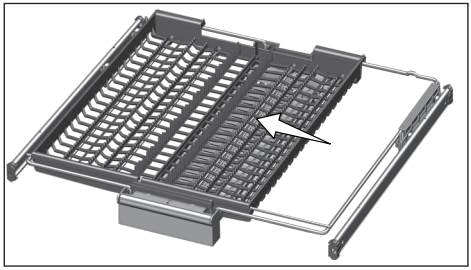

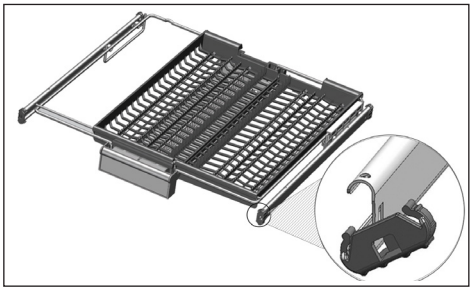

When the central tray is in the lower position, you can load long/high items such as coffee cups, ladles, etc. on the tray. When the side trays lean on two side walls, the handle can be pulled to allow the central tray to rise and the system to be locked.

CEILING CUTLERY BASKET

(Select Models)

Ceiling cutlery basket is designed to wash your cutlery items such as forks, spoons and etc. by placing them between the bars on the basket..

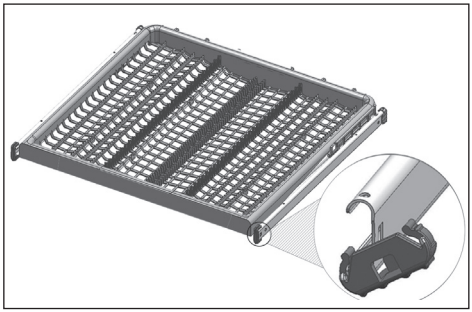

4.3 PROPER AND IMPROPER LOADING OF DISHWARE

1: Salad Fork
2: Teaspoon
3: Dinner fork
4: Knife-solid handle
5: Serving spoon
6: Serving fork

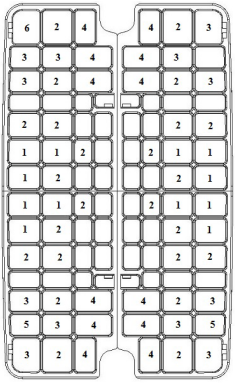

Sliding Cutlery Basket load pattern for 12 place settings according to the AHAM DW-1 Standards

- Place all containers such as cups, glasses and pots into the dishwasher with the opening facing downwards (so that no water can collect).
- The movement of the spray arms must not be hindered.
- Do not overload your dishwasher.
- Only with suitable dishes (mentioned in section 5) will you obtain optimal washing results with a sensible use of energy.

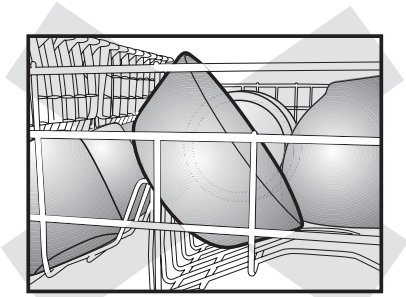

incorrect

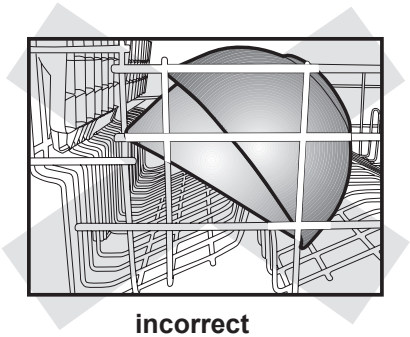

incorrect

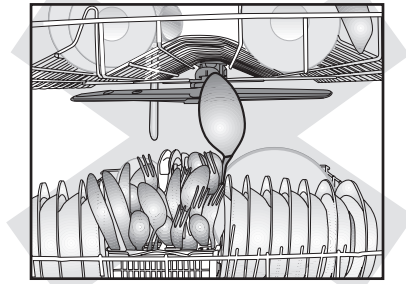

incorrect

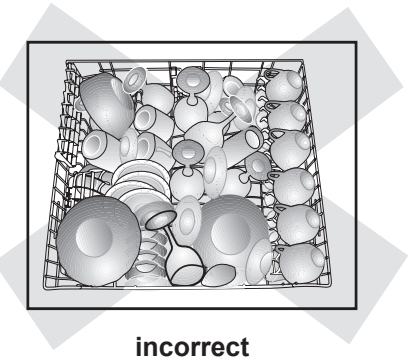

incorrect

5. WHAT SHOULD NOT BE WASHED IN YOUR DISHWASHER

- Rust-sensitive steel parts like iron and cast iron that can rust and stain other utensils and damage the interior stainless steel liner of the dishwasher and void the warranty. Do not wash copper, brass, pewter, bronze or tin.
- Cutlery with wooden or horn handles and cutlery with mother-of-pearl or porcelain handles will deteriorate over time if put in the dishwasher.
- Plastics may lose their shape or color with hot water, please follow the instructions of plastic manufacturers. Be sure that plastic items are marked “dishwasher safe”.
- Glued dishes or cutlery are not suitable for machine washing since certain adhesives may get soft or dissolve with hot water.
- Aluminum may fade over time. Minerals in water and detergent may cause the aluminum to darken or spot.
- Sterling silver articles should not be washed in the dishwasher because they tend to discolor and become dull by dishwasher detergent.
- Silverware and stainless steel items should not be in contact with each other. Mixing these items can cause staining. Remove and hand dry these items immediately when the program ends.
- Decorated glasses, porcelain, fine china and china with gold rims are sensitive to machine washing. They may lose their patterns and colors over time.
- Crystal and very fine glassware may become opaque (etch) losing their shine over time. You may prefer to wash them by hand.
- Do not wash sponges or dish cloths in dishwasher.
- Do not wash art and craft articles in dishwasher.
- Disposable plastics and disposable aluminum cannot withstand high temperatures; do not wash them in the dishwasher.

CAUTION: If in doubt, wash by hand or follow the instructions from the manufacturer of utensils, dishes, glasses or pots and pans.
Do not wash items soiled with cigarette ash, candle wax, varnish, paints or chemicals since they can damage your dishwasher.

NOTICE: We recommend when buying new dishware, try to choose ones that are suitable for machine washing (marked as dishwasher safe).

CARING FOR YOUR TABLE-WARE

The combination of high temperatures and dishwasher detergent may cause damage to some items if they are washed in the dishwasher. Remember, if there is any doubt about any aspect concerning items to be washed in the dishwasher, follow the instructions from the manufacturer of the items, or wash the items by hand.

6. OPERATING THE PRODUCT

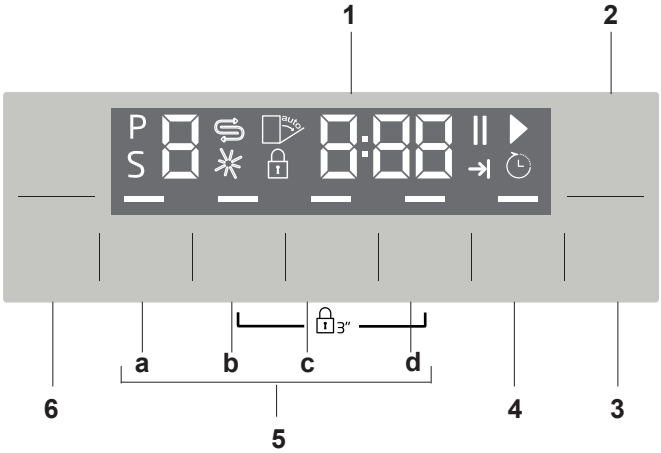

1. Display
2. On/Off key
3. Start/Pause/Cancel key
4. Time Delay key
5. Function keys
   a) Half Load Function
   b) Sanitize Function
   c) Extra Rinse function
   d) Rapid Clean Function
6. Program Selection keys

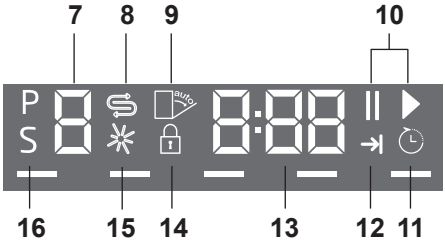

7. Programme indicator
8. Salt (⊜) indicator (Select Models)
9. (Not in use)
10. Start (▶) / Pause (❚❚) indicator
11. Time Delay indicator
12. End of Programme indicator
13. Screen information line
14. Child Lock indicator
15. Rinse aid (✳) indicator
16. Sanitized indicator

6.1 KEYS

On / Off key

This key is used to turn the machine all on off.

	When turned “ON”, the machine will default to Economy Program.

A signal is heard and the machine door is turned on. Press the On / Off key for 1 second to turn off. A signal will be heard and machine will turn off at the end of 1 second. To turn off while the programme is running, keep Off key pressed for 3 seconds. A countdown in the form of “3”, “2”, “1” will appear on the display. Machine will turn off with the end melody at the end of 3 seconds.

Start / Pause / Cancel key

It is used to start, pause or cancel a selected programme or function.

Program Selection keys

They are used to select various programs selected from the Program Table on the following page..

Delayed Start key

Use this to the delay the program for a later time

6.2 PREPARING THE MACHINE

1. Open the door of the dishwasher.
2. Place the dishes in accordance with the instructions in the user manual.
3. Make sure that the upper and lower wah arms spin freely.
4. Put recommended amount of detergent into the detergent dispenser.
5. Check if the Salt and Rinse Aid indicators light and add salt and/or rinse aid if needed.
6. Close the door of the dishwasher.

6.3 PROGRAMME SELECTION

1. Press the On/Off button to turn on your machine.
2. Chose the desired program (See program table on next Page)
3. Press Programme Selection keys until the number of the programme you selected appears on the Programme indicator. Use P+ to switch to the next programme, and P- to switch to the previous one.

PROGRAM TABLE

Program number			0	1	2	3	4	5	6
Program name			ProCare	Pots & Pans+	Regular Wash *	China/Crystal	ExpressDry	Quick Wash	Rinse & Hold
Wash Temperatures		(°C)	72	70	50-55	48	47	45	0
		(°F)	160	162	122-131	118	117	113	0
Rinse Temperatures		(°C)	70	72	61-67	65	71	55	0
		(°F)	140	158	142-157	149	160	131	0
Degree of dirtiness			-	High	Medium	Few	Few - Medium	Few	-
Detergent in dispenser section	15 ml		-	-	-	-	-	+	-
	15-25 ml		+	+	+	+	+	-	-
	+ 5 ml		+	+	+	-	+	-	-
Recommended detergent amount	Hard water	ml	40	40	25-40	25	25-40	15-25	-
		tsp	8	8	5-8	5	5-8	3-5	-
	Medium water	ml	-	40	25	15-25	25	15	-
		tsp	-	8	5	3-5	5	3	-
	Soft water	ml	-	25-40	15-25	15	15-25	15	-
		tsp	-	5-8	3-5	3	3-5	3	-
Wash			-	+	+	+	-	-	+
Main wash			-	+	+	+	+	+	-
Dry			-	+	+	+	+	-	-
Sanitize			-	+	+	-	-	-	-
Duration (minutes)			75	128	110-153	75	58	35	12
Water (liters)			15,2	20,2	9,8-22,2	12	11,8	11,6	4,4
Water (gallons)			3,80	5,30	2,59-5,86	3,10	3,12	3,10	1,20

The consumption values shown in the table were determined under standard conditions. For this reason, deviations are possible under practical conditions. * The energy-usage label is based on this program.

6.4 AUXILIARY FUNCTIONS

Washing programs of your dishwasher are designed to obtain the best cleaning result, considering the type of the soil, soiling degree and properties of the dishes to be washed.
Auxiliary functions are provided in order to enable you to save time, water and energy and to perform a more comfortable washing with conditions specific to you.

	Auxiliary functions may cause changes in the program duration.

	Auxiliary functions are not suitable for all washing programs. Indicator of the auxiliary function that is not compatible with the program will not be active.

To add auxiliary function to the programe:

1. Select the desired washing programe by pressing the programe selection key.
2. In the selected washing programe, if auxiliary function is selected, its symbol will be displayed on the screen. If the function button is pressed again the symbol will disappear and selection is cancelled.
3. Selection will be cancelled when you press the function key again.

Half Load function

It is used to operate the machine without loading it completely.

1. Load your dishes in the machine as you like. You can use both upper and lower racks.
2. Turn the machine on with On/Off key.
3. Select the desired program and press the Half Load key. The Half Load indicator will light on the display in the Function Selected indicator.
4. Start the programme by pressing Start / Pause / Cancel key.

Rapid Clean Function

It shortens the time of the washing cycle selected and decreases water consumption by enabling washing under higher pressure.

Extra Rinse function

Depending on the type of the detergent used, if a detergent dissolving issue is encountered it will remove the resulting stains from the dishes and enables the optimum rinsing performance.

Floor illumination

Illuminates to show program is still running.

(Select Models)

Your machine reflects a light to the floor during the washing process. This light turns off after the washing process is complete.

	Floor illumination cannot be cancelled by the user.

Sanitize Function

Sanitize function raises the water temperature in the final rinse to meet the requirements of NSF/ANSI STANDARD 184 for Residential Dishwashers. Certified residential dishwashers are not intended for licensed food establishments.

	At the end of a succesfull sanitization “S“ is displayed on the display. “S” is not displayed on the display if the cycle is interrupted or the water could not be heated to the required temperature.

	Available programs are indicated on Program Table chart.

	Note: Only sanitizing cycles have been designed to meet the requirements of NSF/ ANSI Standard 184 for soil removal and sanitization efficacy. There is no intention, either directly or indirectly, that all cycles have passed sanitization performance tests.

Automatic Detergent Detection Feature

The product has a feature to automatically detect the type of the detergent and adjust the washing programe and drying system to the best performance. If special tablet detergent is used, the programe duration can be extended by 20 minutes in order to optimize the washing and drying performance.

	Notice: Automatic detergent detection feature should be deactivated during the tests according to AHAM DW-1.

To deactivate:

1. After turning on the machine, press Time Delay and P+ keys simultaneously. Keep them pressed until the countdown 3, 2, 1 is completed on the display.
2. Press P+ key to activate the a: option. Automatic detergent detection feature is disabled at “a:0” option and enabled at "a:1" option. Set the desired option by pressing the Time Delay key.
3. Turn off the machine with On/Off key to save the changes.

Interior Lighting
(Select Models)
Some models have interior lighting to illuminate the interior when the door is opened.

Changing the interior lighting setting

1. After turning on the machine, press Time Delay and P+ keys simultaneously. Continue to press until the countdown 3, 2, 1 is completed on the display.
2. Press P+ key to activate the L: option. The interior lighting is turned off at "L:0" option and turned on at "L:1" option. Set the desired option with the Time Delay key.
3. Turn off the machine with On/Off key to save the changes.

Changing Warning Sound Volume
Your machine is equipped with an audio signal to inform warnings audibly.

1. After turning on the machine, press Time Delay and P+ keys simultaneously. Continue to press until the countdown 3, 2, 1 is completed on the display.
2. Press P+ key to activate the S position.
3. Select one of S1, S2 and S0 with Time Delay key.
4. Turn off the machine with On/Off button to save the changes.

6.4 PROGRAMMING THE WASHING TIME

Time Delay
If an economical electricity tariff is applied in your region, you can use the Time Delay function to wash your dishes during appropriate hours.
You can delay the start of the selected program until 24 hours. Time Delay cannot be set after the programme starts.

1. Press the Time Delay function key after selecting the washing programme and other auxiliary functions.
2. Once you press the Time Delay key, Display Information Line will show "0:30" and Time Delay indicator will start flashing.
3. Set the desired time by pressing the Time Delay key. Time will increase with increments of 30 minutes up to 6 hours and after that in 1 hour increments up to 24 hours every time you press the key.
4. Press Start / Pause / Cancel key to start countdown for the Time Delay. Time Delay indicator and Start / Pause indicator will light continuously until the end of the period. Time Delay is displayed on the Display Information Line. Selected programme will start as soon as the countdown is over.

Changing the settings while Time Delay function is enabled
While the Time Delay function is activated, you cannot make changes in the washing programme, auxiliary functions or the duration of delay time.

	Programme and auxiliary functions cannot be set/changed after the programme has started.

To cancel the Time Delay function

1. Press and hold Start / Pause / Cancel key for 3 seconds.
2. When the Start / Pause / Cancel key is pressed and hold, "3", "2", "1" appear on the Display

Information Line. Time Delay indicator will turn off at the end of the cancellation process and delaying process is cancelled.

	You can select and start a new programme following the cancellation of Time Delay function.

	Time Delay function can not be set after the programme starts.

6.5 STARTING THE PROGRAMME

To start your machine after selecting the programme and auxiliary functions, press Start / Pause / Cancel key. Once the programme starts a tune is played and the estimated time remained to the end of the programme will appear on the Display Information Line. Start / Pause / Cancel indicator starts lighting continuously.

	If the door is opened while the machine is running, the machine will switch to the standby mode. Close the machine door and press Start/Pause/Cancel button. The programme will resume.

	Your machine performs water softening depending on the hardness level of the supply water. Remaining time displayed towards the end in some programmes can be different from the time indicated at the beginning due to this process. The total time can also change while the programme is running depending on the ambient temperature where your machine is installed, temperature of the supply water and amount of the dishes.

	Pay attention not to open the door of the machine when it is running. Stop the machine by pressing Start / Pause / Cancel key if you have to open the door. Then, open the door of the machine. There may be a rush of vapour when you open the door of your machine; be careful. Close the door of your machine and press Start/Pause/Cancel key again. Programme will resume running.

	The machine will remain silent in pause mode for some time in order to remove the water in the machine and on the dishes completely and to have the water softener cleaned, and then it will resume running in drying mode.

6.6 CHILD (KEY) LOCK

You may prevent other people from interrupting and changing the programme cycle and time delay while the machine is running.

To activate the Child Lock:

1. Pres Child (Key) Lock keys simultaneously and hold for 3 seconds.
2. "3", "2", "1" is displayed on Display Information Line and key lock is activated.

	Child Lock prevents the selected programme or functions from being changed and disables the Start / Pause / Cancel key.

	Child Lock does not lock the door of the machine.

	If you turn your machine off by using On/Off key at the end of the programme, the Child Lock will be deactivated automatically.

	For energy saving, the product is automatically turned off following the completion of the programme or if the programme is not started.

To deactivate the Child Lock:

1. Pres Child (Key) Lock keys simultaneously and hold for 3 seconds.
2. "3", "2", "1" is displayed on Display Information Line and key lock is cancelled.

6.7 CANCELLING THE PROGRAMME

1. Press Start/Pause/Cancel key for 3 seconds to cancel the programme.
2. Release the key when the Start / Pause indicator starts flashing. For a couple of minutes the machine will fulfill the necessary operations required to cancel the programme.

	There might be residues of detergent or rinse aid left in the machine and / or on the pieces being washed depending on the step the programme you have cancelled was in.

6.8 SALT INDICATOR (⚗)

Please check the salt indicator on the display to see whether there is adequate amount of softening salt in the dishwasher or not. You need to refill the salt reservoir with salt whenever salt warning indicator appears on the display of your machine.

	Adjusting the water hardness level is explained in Water Softening System section.

6.9 Rinse Aid indicator (☼)

Please check the rinse aid indicator on the display to see whether there is adequate amount of rinse aid in the dishwasher or not. You need to refill the rinse aid reservoir with rinse aid whenever rinse aid warning indicator appears on the display of your machine.

Adjusting the amount of rinse aid

1. After turning on the machine, press Time Delay and P+ keys simultaneously. Keep them pressed until the countdown 3, 2, 1 is completed on the display.
2. Press P+ to move to position P on the display.
3. Set to the appropriate level with the Time Delay key.
4. Turn off the machine with On/Off key to save the changes.

No rinse aid dispensed in P:0 wash position.

1 dose of rinse aid is dispensed in P:1 position.
2 doses of rinse aid are dispensed in P:2 position.
3 doses of rinse aid are dispensed in P:3 position.
4 doses of rinse aid are dispensed in P:4 position.

6.10 END OF PROGRAMME

End of Programme indicator will light up once the washing programme is over.

1. Press the On/Off button to turn off your machine.
2. Close the tap.
3. Unplug the machine from the socket.

i	For energy saving, the product is automatically turned off following the completion of the programme or if the programme is not started.

i	Leave your dishes in the machine for about 15 minutes to cool down after they are washed. Your dishes will dry in a shorter time if you leave the door of your machine ajar during this period. This process will increase the drying effectiveness of your machine.

6.11 WATER CUT-OFF WARNING

If mains water is cut or water inlet tap is turned off the machine cannot take water in and E:02 icon will flash on the programme indicator. As long as the problem continues, washing programme is paused and the water inlet is checked regularly by the machine; when the water is restored E:02 icon will disappear after a while and the washing programme resumes.

6.12 OVERFLOWING WARNING

If the machine intakes too much water or there is leakage at any of the components then the machine will detect this and E:01 icon will flash on the Programme indicator. As long as the overflowing continues safety algorithm will be active and try to discharge the water. If overflowing stops and safety is assured, E:01 icon will disappear. If E:01 does not disappear, there is a permanent fault. In this case the authorised service should be contacted.

ProCare
This program is recommended to be operated on each 1-2 months for machine cleaning and necessary hygiene. The program should be operated while the machine is empty. In order to achieve an efficient result, it is recommended to use together with special machine cleaning agents.

	Do not use this program to clean dishes. As it operates in high temperatures, it is harmful for the dishes.

7. DETERGENT

You can use powder, liquid/gel or tablet detergents in the machine.

	Only use in the machine the detergents produced particularly for use with dishwashers. We recommend you not to use detergents that contain chlorine and phosphate as they are harmful for the environment.

7.1 ADDING DETERGENT

	Pay attention to the warnings on the detergent packaging to get better washing and drying results. Contact the manufacturer of the detergent for further questions.

	Do not put solvents into the detergent dispenser. There is the risk of explosion!

Put the detergent into the detergent dispenser just before operating the machine as illustrated below.

1. Push the latch to right to open the detergent dispenser lid (A).

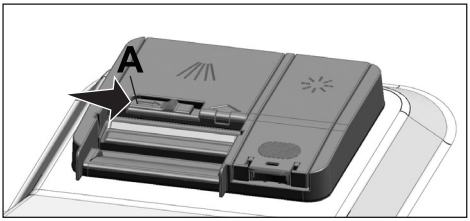

2. Put suggested amount of powder, liquid/gel or tablet detergent in the reservoir.

	Inside the detergent dispenser there are level markings that help you use appropriate amount of powder detergent. When brimful, detergent dispenser will contain 1.5 Ounces (45 cm³) of detergent. Fill detergent up to .5 Ounces (15 cm³) or .85 ounces (25 cm³) level marks in the detergent dispenser according to fullness of the machine and/or soiling degree of the dishes. One tablet is enough if you are using detergent tablets.

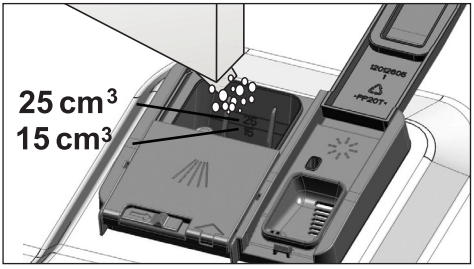

3. Push the lid of the detergent dispenser to close it. A "click" will be heard when the lid is closed.

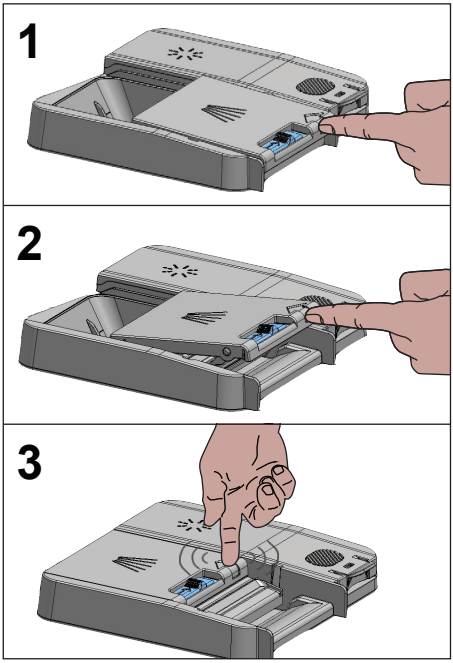

Use powder or liquid/ gel detergent in short programs without prewash since the solubility of the tablet detergent changes depending on the temperature and time.

7.2 TABLET DETERGENTS

In addition to the conventional tablet detergents, there are also commercially available detergent tablets that show water softening salt and/or rinse aid effect. Some types of these detergents contain special-purpose components such as glass and stainless steel protectors. These tablets show their effects up to a certain water hardness level (59 gpg). Water softening salt and rinse aid must also be used together with the detergent if the water hardness level is above the mentioned level.

The best washing performance in dishwashers is obtained by using detergent, rinse aid and water softening salt individually.

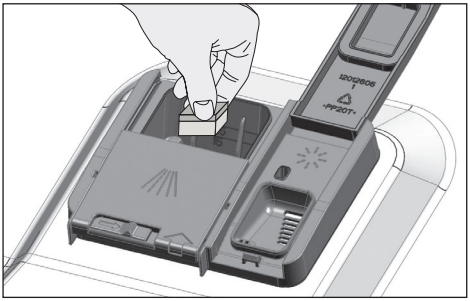

Observe the instructions of the detergent manufacturer on the package when using tablet detergents.

Contact the detergent manufacturer if your dishes are wet and/or if you notice limescale spots particularly on your glasses after the washing program is over when using a tablet detergent.

When you switch to powder detergent from tablet detergent:

1. Make sure that salt (Select Models) and rinse aid reservoirs are full.
2. Set the water hardness to the highest level and perform an empty run.
3. After the empty washing cycle, review the user manual and readjust the water hardness level so as to suit the water supply.
4. Make the appropriate rinse aid settings.

7.3 RINSE AID

	The rinse aid used in dishwashers is a special combination that aims to increase drying efficiency and prevent water or lime stains on the washed items. For this reason, care must be paid to have rinse aid in the rinse aid reservoir and to use rinse aids produced specially for dishwashers only.

1. Open the lid of the rinse aid reservoir with the help of the latch.

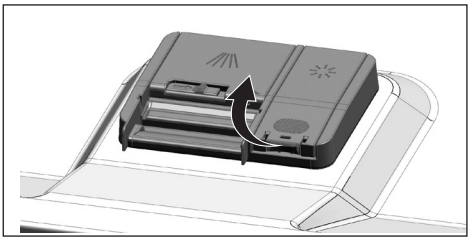

2. Fill the reservoir until “MAX” level.

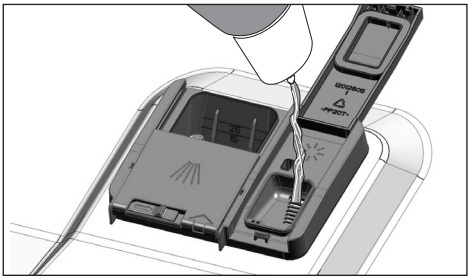

3. Slightly press the point (B) of the reservoir lid to close it.

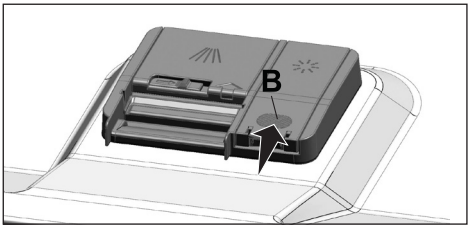

4. If there are stains on tableware items after washing, level must be increased and if there is a blue trace after wiping them by hand, it must be decreased. This is set to position 3 as factory default.

	The rinse aid adjustment is described under "Adjusting the amount of rinse aid" in the section for operating the machine.

	Wipe clean any spilled rinse aid outside the reservoir. Rinse aid that spilled accidentally will cause foaming and it will eventually decrease washing performance.

8. ADJUSTING THE WATER SOFTENING SYSTEM

(Select Models)

Cleaning, rinsing and drying performance of your dishwasher will increase when water softening system is adjusted properly.

Adjust the new water hardness level according to the Water hardness level instruction in this booklet.

Use the test strip supplied with the product according to the steps given below to determine hardness level of your supply water.

a	b	c	d	e	f
		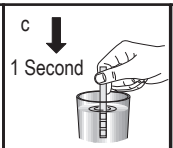	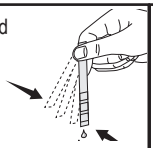		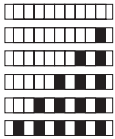
Remove the test strip from the packet.	Turn on the tap and let the water run for about a minute.	Hold the test strip in the water for about a second.	Remove the test strip from the water and shake it.	Wait for 1 minute.	The test strip shows you the hardness level.

After determining hardness level of the supply water:

1. Turn on the machine, press Time Delay and P+/P keys simultaneously. After the countdown (3,2,1) is displayed keep the keys pressed for a while.
2. Press P+/P key to activate the (r..) position.
3. Using Time Delay key, adjust water hardness level according to the hardness of the supply water. See “Water hardness level adjustment table” for correct setting.
4. Press On / Off key to save the setting.

Water hardness level adjustment table

Hardness Level	Grains Per Gallon (gpg)	German Water Hardness °dH	French Water Hardness °dF	Water Hardness Level Indicator
0th Level	0-14	0-4	0-8	Press the Time Delay key to switch the water hardness level to position 1. (r1)
1st Level	15-22	5-7	9-13	
2nd Level	23-37	8-12	14-22	Press the Time Delay key to switch the water hardness level to position 2. (r2)
3rd Level	38-46	13-15	23-27	Press the Time Delay key to switch the water hardness level to position 3. (r3)
4th Level	47-58	16-19	28-34	Press the Time Delay key to switch the water hardness level to position 4. (r4)
5th Level	59-154	20-50	35-90	Press the Time Delay key to switch the water hardness level to position 5. (r5)

If the hardness level of the supply water is above 154 gpg (grains per gallon) or if you are using well water, then it is recommended to use water purification devices and special filters.

If the hardness level of the supply water is below 22 gpg, there is no need to use salt in your dishwasher. If this is the case, “No Salt Warning Indicator” (if any) illuminates continuously on the panel of your machine.

If the water hardness level adjustment is set to level 1, the “No salt warning indicator” will illuminate continuously although it is not necessary to use salt. If

you use salt under this condition, salt will not be consumed and the Salt indicator will not illuminate.

i	If you move your house, it is necessary to readjust water hardness level of your machine by considering the information given above according to the hardness level of the supply water in your new location. Your machine will display the most recently adjusted water hardness level.

9. FILLING THE DISHWASHER SALT DISPENSER

(Select Models)

Water softening system needs to be regenerated in order for the product operates with the same performance continuously. Dishwasher salt is used for this purpose.

i	Use only special softening salts produced particularly for the dishwashers in your machine.

i	It is recommended to use granule- or powder-formed softening salts in the water softening system. Do not use salts that do not completely dissolve in water such as table salt or rock salt. Otherwise the performance of the system may deteriorate in time.

i	Salt reservoir will be filled with water when you start the product. For this reason, add salt before operating the machine.

1. Firstly, take the lower basket out to add softening salt.
2. Turn the salt reservoir lid counter-clockwise to open it (A, B).

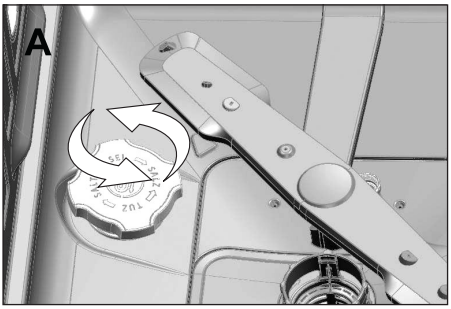

3. Add 4 cups of water to salt reservoir of your machine only in initial use (C).

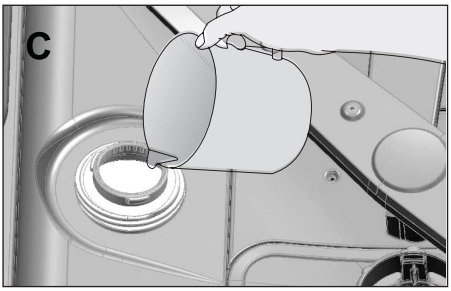

4. Fill the salt reservoir with salt by using the salt funnel (D). To speed up dissolution rate of salt in water, stir it with a spoon.

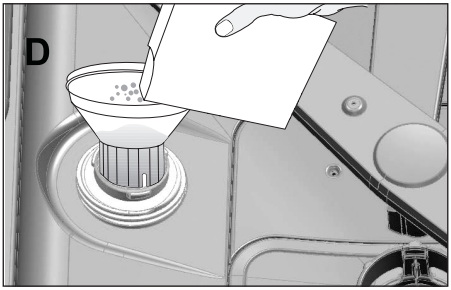

	You can put about 4.4 Pounds of softening salt into the salt reservoir.

5. Replace the lid and tighten it when the reservoir is full.

	You need to add salt right before starting the machine. Thus, the overflowing salty water will be flushed immediately, preventing the risk of corrosion in machine. In cases where you would not start washing immediately, run your machine empty in the shortest program.

	Since different salt brands in the market have different particle sizes and since the water hardness may vary, dissolution of the salt in water may take a couple of hours. Therefore, Salt Indicator remains on for a while after adding salt into the machine.

10. CARE AND MAINTENANCE

WARNING: Before cleaning or carrying out maintenance, switch off the appliance, disconnect the mains plug and turn off the water tap.

WARNING: Do not repair or replace any part of the dishwasher or attempt any servicing unless specifically recommended by this manual. We recommend that the dishwasher only be repaired by an authorized service agent.

CAUTION : To avoid the possibility of slipping, keep the floor around the dishwasher clean and dry. Keep your appliance free from the accumulation of combustible materials, such as lint, rags, and chemicals. If the dishwasher is not in use for an extended period of time, we recommend you check that the baskets are empty, leave the inside of the dishwasher clean, the door cracked open to allow air to circulate, turn off both the power and water supply to the dishwasher.

10.1 CARING FOR YOUR DISHWASHER EXTERIOR

CAUTION : Possible dishwasher damage: Abrasive cleaners, scouring pads, abrasive cloths (paper towels) can damage the dishwasher decorative door.

Cleaning the control panel: Use only soft cloth that is lightly dampened with mild detergent. Clean the control panel only with a moist cloth and clear water.

Cleaning the colored doors: Use only soft cloth that is lightly dampened with mild detergent.

Cleaning the stainless steel doors: Use a soft cloth with a cleaner made for cleaning stainless steel. For the best results, apply the stainless steel cleaner to a soft cloth and wipe the surface in the direction of the grain.

Cleaning the door gasket: Regularly clean the door gasket with a damp cloth to remove food particles and other debris. Use a gentle household cleaner for the outside and the door seals, and rinse thoroughly.

10.2 CARING FOR YOUR DISHWASHER INTERIOR

NOTICE: Cleaning your dishwasher at regular intervals ensures longer product life and reduces the risk of recurring problems. Always disconnect the power to machine before cleaning.

CAUTION : When cleaning the underside of the main filter, care must be taken on the sharp outer edge to avoid the risk of cut type injuries.

10.3 CLEANING THE FILTERS

Clean the filters at least once a week in order for the machine operates efficiently. Check if food residues are left on the filters. If there are food residues on filters, take them out and clean well under running water.

1. Turn the micro filter (1) and coarse filter (2) assembly counterclockwise and pull it out from its seating.

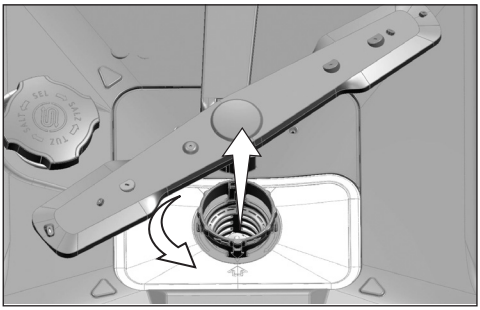

2. Pull out the metal / plastic filter (3) from the seating.

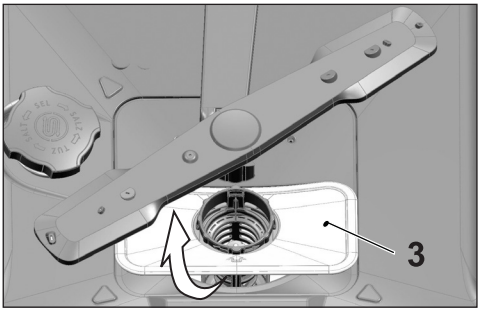

3. Press the two pawls on the coarse filter inwards and separate the coarse filter from the assembly.

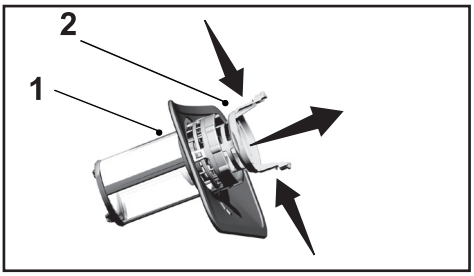

4. Clean all three filters under tap water by means of a brush.
5. Replace the metal/plastic filter.
6. Place the coarse filter into the microfilter. Make sure that it is properly seated. Turn the coarse filter clockwise until a “click” sound is heard.

	Do not use the dishwasher without filter.
	Incorrect placement of the filters will reduce washing efficiency.

10.4 CLEANING THE HOSE FILTER

Damages on the machine that may be caused by impurities coming from the urban supply water or your own water installation (such as sand, dirt, rust, etc.) can be prevented by means of the filter attached to the water inlet hose. Check the filter and the hose regularly and clean them if necessary.

1. Turn off the tap and remove the hose.
2. After taking out the filter, clean it under running tap water.
3. Place the cleaned filter back to its seat in the hose.
4. Install the hose to tap.

(Select Models)

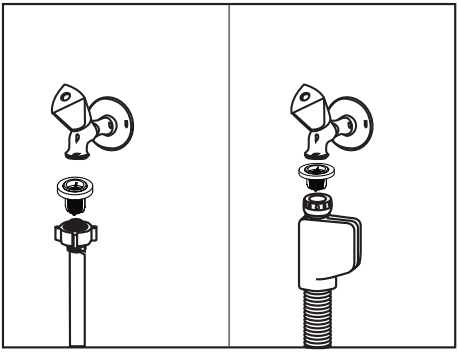

10.5 CLEANING THE WASH ARMS

Clean the wash arms at least once a week in order for the machine operates efficiently.

LOWER WASH ARMS

Check if the holes on the lower wash arms (1) are clogged. If they are clogged, remove and clean the impeller. Pull the lower wash arms up to remove it.

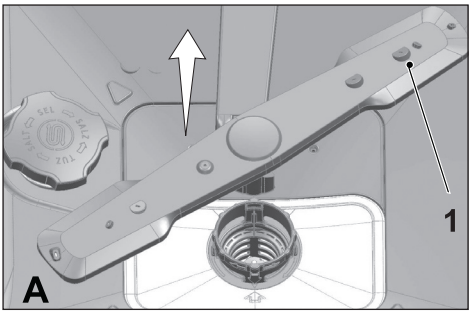

UPPER WASH ARMS

Check if the holes on the upper impeller (1) are clogged. If they are clogged, remove and clean the wash arms. Turn its nut to left to remove the upper wash arms.

Make sure that the nut is tightened well when installing the upper wash arms.

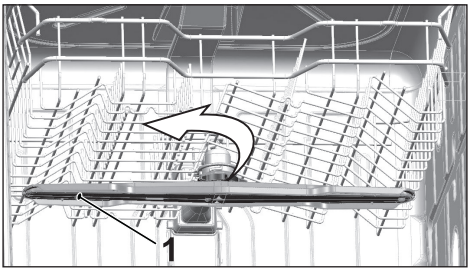

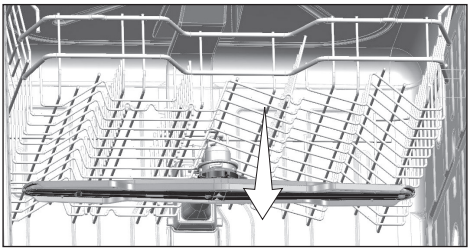

11. TROUBLESHOOTING

Machine does not start.

- Power cable is unplugged. >>> Check if the power cable is plugged in.
- Cicuit Breaker is blown. >>> Check the Cicuit Breaker in your house.
- Water is cut. >>> Make sure that the water inlet tap is open.
- Door of the machine is open. >>> Make sure that you have closed the door of the machine.
- On / Off button is not pressed. >>> Make sure that you have turned on the machine by pressing the On / Off button.

Dishes are not washed clean

- Dishes are not placed orderly in the machine. >>> Load the dishes as described in the user manual.
- Selected program is unsuitable. >>> Select a program with a higher temperature and cycle time.
- Wash arms are stuck. >>> Prior to starting the program, turn the lower and upper Wash arms by hand to make sure that they rotate freely.
- Wash arms holes are clogged. >>> Lower and upper Wash arms holes might be clogged with small food particles and debris. Clean the Wash arms regularly as illustrated in section “Cleaning and Care”.
- Filters are clogged. >>> Check if the filter system is clean. Clean the filter system regularly as illustrated in section “Cleaning and Care”.
- Filters are installed incorrectly. >>> Check the filter system and make sure that it is installed correctly.
- Baskets are overloaded. >>> Do not overload the baskets in excess of their capacity.
- Detergent is stored under unsuitable conditions. >>> If you are using powder detergent, do not store the detergent package in humid places. Keep it in a closed container if possible. For ease-of-storing, we recommend you to use tablet detergents.
- Detergent is not sufficient. >>> If you are using powder detergent, adjust the amount of detergent according to the soiling degree of your dishes and/or program definitions. We recommend you to use tablet detergents for optimum results.
- Rinse aid is not sufficient. >>> Check the rinse aid indicator and add rinse aid if necessary. Increase the rinse aid setting if there is enough amount of rinse aid in the machine.
- Detergent dispenser lid is left open. >>> Make sure that the detergent dispenser lid is closed tightly after adding detergent.

Dishes are not dry at the end of cycle

- Dishes are not placed orderly in the machine. >>> Place your dishes in a way that no water will accumulate in them.
- Rinse aid is not sufficient. >>> Check the rinse aid indicator and add rinse aid if necessary. Increase the rinse aid setting if there is enough amount of rinse aid in the machine.
- Machine is unloaded right after the program is over. >>> Do not unload your machine right after washing process is completed. Slightly open the door and

wait for evacuation of the steam inside for a while. Unload the dishes after the pieces cool down to a touchable level. Start unloading process from the lower basket. Thus, dropping of water remained on a piece at upper basket onto the pieces at lower basket is prevented.

- Selected program is unsuitable. >>> Since rinsing temperature is low at program with short duration, drying performance will also be low. Select program with longer duration for a higher drying performance.
- Surface quality of the kitchen utensils is deteriorated. >>> Desired washing performance can not be obtained at kitchen utensils with deteriorated surfaces and it is not suitable to use such utensils in terms of hygiene as well. Also, water can not flow easily on deteriorated surfaces. It is not recommended to wash such kitchen utensils in dishwasher.

i	It is normal that drying complaints can be experienced with Teflon kitchen utensils. It is associated with the structure of Teflon. Since the surface tensions of Teflon and water are different, water droplets will remain as beads on the Teflon surface.

Stains remaining on dishes when cycle has completed.

- Selected program is unsuitable. >>> Select a program with a higher temperature and cycle time.
- Surface quality of the kitchen utensils is deteriorated. >>> Tea and coffee stains or other dye spots may not be cleaned in dishwasher when they have penetrated in deteriorated surfaces. Desired washing performance can not be obtained at kitchen utensils with deteriorated surfaces and it is not suitable to use such utensils in terms of hygiene as well. It is not recommended to wash such kitchen utensils in dishwasher.
- Detergent is stored under unsuitable conditions. >>> If you are using powder detergent, do not store the detergent package in humid places. Keep it in a closed container if possible. For ease-of-storing, we recommend you to use tablet detergents.

Lime traces remain on dishes and glassware gains a misty appearance

- Rinse aid is not sufficient. >>> Check the rinse aid indicator and add rinse aid if necessary. Increase the rinse aid setting if there is enough amount of rinse aid in the machine.
- Water hardness setting is low or salt level is insufficient >>> Measure the hardness of the supply water appropriately and check the water hardness setting.
- Salt leakage exists. >>> Pay attention not to spill salt around the salt filling hole while adding salt. Make sure that the salt reservoir lid is tightly closed after finishing the filling process. Run the prewash program to remove the salt that spilled inside the machine. Since the salt granules that will remain under the lid will dissolve during prewash, causing the lid loosen, check the lid once again at the end of the program.

There is a different odor in the machine

	A new machine has a peculiar odor. It will fade out after a couple of washing.

- Filters are clogged. >>> Check if the filter system is clean. Clean the filter system regularly as illustrated in section “Cleaning and Care”.
- Dirty dishes are kept in dishwasher for 2-3 days. >>> If you are not going to start the machine right after you have put the dishes into it, remove the remnants on the dishes and run the Prewash program without detergent every 2 days. In such cases, do not close the door of the machine completely in order to avoid odor build up in machine. You can also use commercially available odor removers or machine cleaners.

Rust, discoloration or surface deterioration occurs on dishes

- Salt leakage exists. >>> Salt may cause deterioration and oxidation on metal surfaces. Pay attention not to spill salt around the salt filling hole while adding salt. Make sure that the salt reservoir lid is tightly closed after finishing the filling process. Run the prewash program to remove the salt that spilled inside the machine. Since the salt granules that will remain under the lid will dissolve during prewash, causing the lid loosen, check the lid once again at the end of the program.
- Salty food remnants have remained on dishes for a long time. >>> If silverware soiled with such foods will be kept waiting in machine, dirt must be removed by prewash or dishes must be washed without being kept waiting.
- Electric installation is not grounded. >>>Check if your machine is connected to the actual grounding line. Otherwise, the static electric created in the product causes arcs on the surfaces of metal items creating pores, removing the protective cover on the surface and causing discoloration.
- Intensive cleansers such as bleaches are used. >>> Protective cover on metal surfaces gets damaged and looses its efficiency in time when it gets in contact with cleansers such as bleach. Do not wash your dishes with bleach.
- Metal items particularly such as knives are used for purposes other then their intended uses. >>> Protective cover on the edges of knives may get damaged when they are used for purposes such as opening cans. Do not use metal kitchen utensils out of their intended uses.
- Silverware are made of low quality stainless steel. >>> Corrosion on such items is inevitable; they should not be washed in dishwashers.
- Kitchen utensils that are already corroded are washed in dishwasher. >>> Rust on a corroded item can migrate to other stainless steel surfaces and cause corrosion on those surfaces as well. Such items should not be washed in dishwashers.

Detergent remains in detergent dispenser.

- Detergent dispenser was damp when adding detergent. >>> Make sure that the detergent dispenser is dried well prior to filling it with detergent.
- Detergent is added long before the washing process. >>> Pay attention to add detergent shortly before start-up of the washing.
- Opening of the detergent dispenser lid is prevented during washing. >>> Place the dishes in a way that will not prevent the detergent dispenser lid from opening and the water going into the machine from impellers.
- Detergent is stored under unsuitable conditions. >>> If you are using powder detergent, do not store the detergent package in humid places. Keep it in a closed container if possible. For ease-of-storing, we recommend you to use tablet detergents.
- Wash Arm holes are clogged. >>> Lower and upper Wash Arm holes might be clogged with food remnants such as lemon pips. Clean the Wash Arm regularly as illustrated in section “Cleaning and Care”.

Decorations and ornaments on kitchen utensils are being erased.

i	Decorated glasses and decorated luster porcelains are not suitable for washing in the dishwasher. Manufacturers of glassware and porcelain tableware items do not recommend washing such kitchen utensils in the dishwashers either.

Dishes are scratched.

i	Kitchen utensils that contains or are made of aluminum should not be washed in dishwasher.

- Salt leakage exists. >>> Pay attention not to spill salt around the salt filling hole while adding salt. Spilled salt can cause scratches. Make sure that the salt reservoir lid is tightly closed after finishing the filling process. Run the prewash program to remove the salt that spilled inside the machine. Since the salt granules that will remain under the lid will dissolve during prewash, causing the lid loosen, check the lid once again at the end of the program.
- Water hardness setting is low or salt level is insufficient >>> Measure the hardness of the supply water appropriately and check the water hardness setting.
- Dishes are not placed orderly in the machine. >>> When placing the glasses and other glassware into the basket lean them not against other dishes but the edges or racks of the basket or the glass support wire. Striking of the glasses to each other or to other dishes due to the impact of water during washing can cause breaks, or scratches on their surfaces.

A smear remains on glasses that resembles milk stain which can not be removed when wiped by hand. A bluish / rainbow appearance occurs when the glass is pointed to light.

- Excessive rinse aid is used. >>>Lower rinse aid setting. Clean the spilled rinse aid when adding rinse aid.
- Corrosion has occurred on glass due to soft water. >>> Measure the hardness of the supply water appropriately and check the water hardness setting. If your supply water is soft (<15 gpg), do not use salt. Choose programs that wash in higher temperatures (140-149 degress Fahrenheit). You can also use glass protective detergents that are commercially available.

Foam forms in the machine.

- Dishes are washed with hand-wash detergent by hand but not rinsed before placing them into the machine. >>> Hand-wash detergents do not contain antifoam. There is no need to hand-wash the dishes before placing them into the machine. Removing the coarse soil on the dishes under tap water, with a sponge or towel.
- Rinse aid has spilled into the machine when adding rinse aid. >>> Take care that rinse aid is not spilled in the machine when you are filling it. Clean any spilled rinse ait with the help of a tissue paper/towel.
- Lid of the rinse aid reservoir is left open. >>> Make sure that the lid of the rinse aid reservoir is closed after adding rinse aid.

Kitchen utensils are broken.

- Dishes are not placed orderly in the machine. >>> Load the dishes as described in the user manual.
- Baskets are overloaded. >>> Do not overload the baskets in excess of their capacity.

Water remains in the dishwasher at the end of the program.

- Filters are clogged. >>> Check if the filter system is clean. Clean the filter system regularly as illustrated in section “Cleaning and Care”.
- Discharge hose is clogged/blocked. >>> Check the discharge hose. If necessary, remove the discharge hose, clear the blockage and insert is as illustrated in the user manual.

i	If you cannot eliminate the problem although you follow the instructions in this section, consult your dealer or the Authorized Service Agent. Never try to repair a nonfunctional product yourself.

12. TECHNICAL FEATURES

Load capacity	14 place settings
Permissible water pressure	4.35 - 145 psi (0.3 - 10 bars)
Electrical connection	120 V (volts), 12 A (amps), 60Hz (hertz)
Total power	1400 W (watts)
Heater power	1100 W (watts)

NOTICE: Because we continually strive to improve our products, we may change our specifications and design without prior notice.
This device corresponds to the following directives:
UL 749 Household Dishwasher directive.

13. WARRANTY STATEMENT FOR THE BLOMBERG DISHWASHERS

The warranties provided by Blomberg in these statements only apply to Blomberg dishwashers sold to the original purchaser or homeowner in the US and Canada. **The warranty is not transferable**. To obtain warranty service, please contact our nearest distributor as listed by state. You will need your dishwasher model number, serial number, retailer name and address, where purchased and purchase date / installation date. This warranty gives you specific legal rights, and you may also have other rights which vary from state to state.

“This product is fully tested and went through official quality assurance inspections before leaving the original manufacturing site. Warranty terms for this Blomberg household appliance is not valid if the product is altered, tampered, modifed, additional parts assembled, fixed and re-packed by an authorized distributor, servicer, a third party retailer, reseller or by any other unauthorized person(s)”

1 year * limited warranty from date of first installation
Blomberg will repair or replace at no cost to the consumer any defective parts of the dishwasher if used under normal household conditions or is installed at an employee kitchen, office use, lodges, primary care facilities such as elderly homes, etc. (warranty is void if the product is installed high traffic locations such as dormitories, school kitchens, restaurants, cafetaries etc. Please consult Blomberg authorized distributor prior to operating the unit about the warranty disclaimer). Service must also be performed by an authorized Blomberg service agency. (Cosmetic defects must be reported within 10 business days from installation)

2 year * ++ limited warranty from date of first installation
(Parts only) Blomberg will repair or replace any parts at no cost to the consumer if material defects or workmanship have caused the damage or failure of these components**. Again the dishwasher must have been used under normal household conditions and not commercially as stated above (Labor charges are the responsibility of the consumer).**

5 year * ++ limited warranty from date of first installation
(parts only 3-5 years) Blomberg will repair or replace any circuit boards or nylon dishwasher racks **(excluding any plastic rack attachments)** at no cost to the consumer if material defects or workmanship have caused the damage or failure of these components. **The dishwasher must have been used under normal household conditions and not commercially (Labor charges are the responsibility of the consumer)**

Lifetime limited warranty from date of first installation * ++
(parts only) Blomberg will repair or replace to **the original owner** the stainless steel tub or door if rust through occurs **under normal household use and normal water conditions (no excessive chlorine).**

Blomberg may, at its option, also replace the whole dishwasher with the same and/or equivalent model with equal or better functionality if the original model is no longer available. **(Labor, removal and installation charges are the responsibility of the consumer.)**

Disclaimers of warranties and exclusions:
Warranty does not cover service costs by an authorized service agent to correct installation, electrical and plumbing problems or educational instruction on the use of the dishwasher. The warranty also does not cover defects or damage caused by an act of god (such as storms, floods, fires, mudslides, steam protection folio etc.), damage cause by use of the dishwasher for purposes other than those for which it was designed, misuse, disuse, abuse, accident, alteration, improper installation, maintenance, travel fees, service calls outside normal service hours, unauthorized service work.

TO THE EXTENT PERMITTED BY LAW, THIS WARRANTY IS IN LIEU OF ALL OTHER EXPRESSED AND IMPLIED WARRANTIES, INCLUDING THE IMPLIED WARRANTIES OF MERCHANTABILITY AND FITNESS FOR A PARTICULAR PURPOSE. BLOMBERG UNDERTAKES NO RESPONSIBILITY FOR THE QUALITY OF THIS PRODUCT EXCEPT AS OTHERWISE PROVIDED IN THIS WARRANTY STATEMENT. BLOMBERG ASSUMES NO RESPONSIBILITY THAT THE PRODUCT WILL BE FIT FOR ANY PARTICULAR PURPOSE FOR WHICH YOU MAY BE BUYING THIS PRODUCT, EXCEPT AS OTHERWISE PROVIDED IN THIS WARRANTY STATEMENT.

Blomberg does not assume any responsibility for incidential or consequential damages. Such damages include, but are not limited to, loss of profits, loss of savings or revenue, loss of use of the dishwasher or any associated equipment, cost of capital, cost of any substitute equipment, facilities or services, downtime, the claims of third parties, and injury to property. Some states do not allow the exclusion or limitation of incidental or consequential damages, so the above limitations or exclusion may not apply to you.

*** installation date shall refer to either purchase date or 5 business days after delivery of the product to the home, whichever is later.**

++ parts replaced will assume the identity of the original parts + their original warranty.

No Other Warranties. This Warranty Statement is the complete and exclusive warranty from the manufacturer. No employee of Blomberg or any other party is authorized to make any warranty in Statement addition to those made in this Warranty Statement.

14. HOW TO GET SERVICE

Please contact the Distributor for your State or Province as listed on the Distributor Contact List, or call our Toll Free Number at **1 800 459 9848** for direction to an Authorized Blomberg Service Agent.

Blomberg®

seit 1883

www.blomberginternational.com

info@blomberginternational.com